JVC

SERVICE MANUAL

COMPACT DISC CASSETTE DECK RECEIVER

CA-ME38

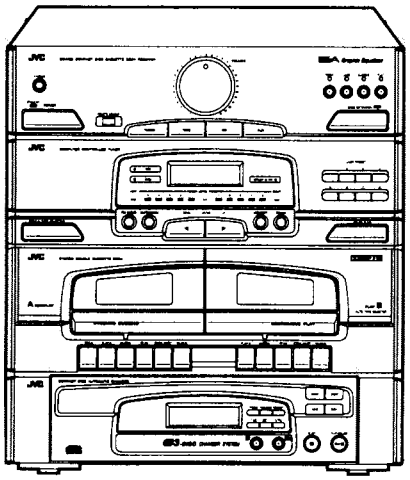

Area Suffix

BS ·····the U.K.
EN ·····Nordic Countris
G ·····Germany
GI ·····Italy
VX ·····East Europe
US ·····Singapore
U ·····Universal except

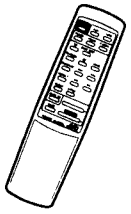

COMPACT disc DIGITAL AUDIO

Contents

Safety Precaution ····· 1–2
Inportant for Lazer Products ····· 1–3
Instruction Book ····· 1–4
Description of Major ICs ····· 2–1
Disassembly Procedures ····· 2–9
Adjustment Procedures ····· 2–15
Block Diagram ····· 2–18
Ic Terminal voltage chart ····· 2–21
Schematic Diagrams ····· 2–25
Printed Circuit Board ····· 2–30
Parts rist ····· 3–1

COPYRIGHT © 1995 VICTOR COMPANY OF JAPAN, LTD.

No. 20520
Sep. 1995

Safety Precautions

1. The design of this product contains special hardware and many circuits and components specially for safety purposes. For continued protection, no changes should be made to the original design unless authorized in writing by the manufacturer. Replacement parts must be identical to those used in the original circuits. Services should be performed by qualified personnel only.
2. Alterations of the design or circuitry of the product should not be made. Any design alterations of the product should not be made. Any design alterations or additions will void the manufacturer's warranty and will further relieve the manufacture of responsibility for personal injury or property damage resulting therefrom.
3. Many electrical and mechanical parts in the products have special safety-related characteristics. These characteristics are often not evident from visual inspection nor can the protection afforded by them necessarily be obtained by using replacement components rated for higher voltage, wattage, etc. Replacement parts which have these special safety characteristics are identified in the Parts List of Service Manual. Electrical components having such features are identified by shading on the schematics and by (⚠) on the Parts List in the Service Manual. The use of a substitute repalcement which does not have the same safety characteristics as the recommended replacement parts shown in the Parts List of Service Manual may create shock, fire, or other hazards.
4. The leads in the products are routed and dressed with ties, clamps, tubings, barriers and the like to be separated from live parts, high temperature parts, moving parts and/or sharp edges for the prevention of electric shock and fire hazard. When service is required, the original lead routing and dress should be observed, and it should be confirmed that they have been returned to normal, after re-assembling.
5. Leakage currnet check (Electrical shock hazard testing)
   After re-assembling the product, always perform an isolation check on the exposed metal parts of the product (antenna terminals, knobs, metal cabinet, screw heads, headphone jack, contorl shafts, etc.) to be sure the product is safe to operate without danger of electrical shock.
   Do not use a line isolation transformer during this check.
   - Plug the AC line cord directly into the AC outlet. Using a "Leakage Current Tester", measure the leakage current from each exposed metal parts of the cabinet, particularly any exposed metal part having a return path to the chassis, to a known good earth ground. Any leakage current must not exceed 0.5mA AC (r.m.s.).
   - Alternate check method
     Plug the AC line cord directly into the AC outlet. Use an AC voltmeter having, 1,000 ohms per volt or more sensitivity in the following manner. Connect a 1,500Ω 10 W resistor paralleled by a 0.15 µF AC-type capacitor between an exposed metal part and a known good earth ground.
     Measure the AC voltage across the resistor with the AC voltmeter.
     Move the resistor connection to each exposed metal part, particularly any exposed metal part having a return path to the chassis, and meausre the AC voltage across the resistor.
     Now, reverse the plug in the AC outlet and repeat each measurement. Any voltage measured must not exceed 0.75 V AC (r.m.s.). This corresponds to 0.5 mA AC (r.m.s.).

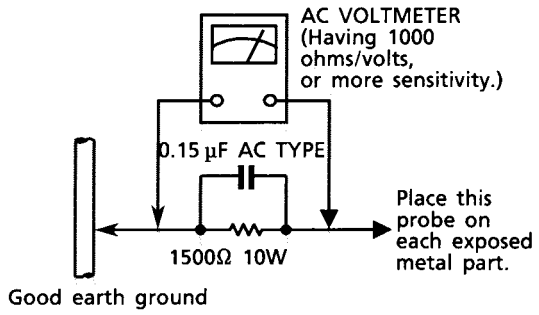

Warning

1. This equipment has been designed and manufactured to meet international safety standards.
2. It is the legal responsibility of the repairer to ensure that these safety standards are maintained.
3. Repairs must be made in accordance with the relevant safety standards.
4. It is essential that safety critical components are replaced by approved parts.
5. If mains voltage selector is provided, check setting for local voltage.

Important for Laser Products

1. CLASS 1 LASER PRODUCT
2. DANGER : Invisible laser radiation when open and interlock failed or defeated. Avoid direct exposure to beam.
3. CAUTION : There are no serviceable parts inside the Laser Unit. Do not disassemble the Laser Unit. Replace the complete Laser Unit if it malfunctions.
4. CAUTION : The compact disc player uses invisible laser radiation and is equipped with safety switches which prevent emission of radiation when the drawer is open and the safety interlocks have failed or are defeated. It is dangerous to defeat the safety switches.
5. CAUTION : If safety switches malfunction, the laser is able to function.
6. CAUTION : Use of controls, adjustments or performance of procedures other than those specified herein may result in hazardous radiation exposure.

VARNING : Osynlig laserstrålning när denna del är öppnad och spärren är urkopplad. Betrakta ej strålen.

VARO : Avattaessa ja suojalukitus ohitettaessa olet alttiina näkymättömälle lasersäteilylle. Älä katso säteeseen.

ADVARSEL : Usynlig laserstråling ved åbning, når sikkerhedsafbrydere er ude af funktion. Undgå udsættelse for stråling.

ADVARSEL : Usynlig laserstråling ved åpning, når sikkerhetsbryteren er avslott. unngå utsettelse for stråling.

REPRODUCTION AND POSITION OF LABELS

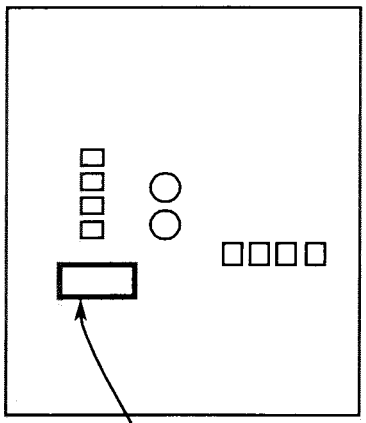

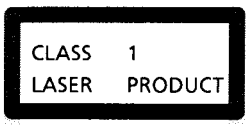

CLASSIFICATION LABEL
(Except for the U.S.A. and Canada)

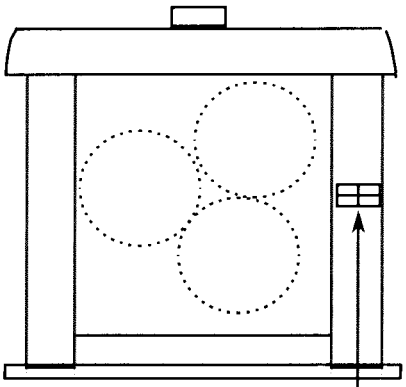

WARNING LABEL
(Except for the U.S,A)

DANGER: invisible laser radiation when open and interlock failed or defeated. AVOID DIRECT EXPOSURE TO BEAM. (e)

VARNING: Osynling laserstråling när denna del ä öppnad och spärren är urkoppled. Betrakta ej stålen. (s)

ADVARSEL: Usynling laserstråling ved åbning, når sikkerhedsafbrydere er ude at funktion. Undgåudsættelse for stråling. (d)

VARO: Avattaessa ja suojalukitus ohitettaessa olet alttiina näkymättömälle lasersäteilylle. Älä katso säteeseen. (f)

FOR YOUR INFORMATION

Troubleshooting

- If you are having a problem with your CA-ME38, check this list for a possible solution before calling for service.
- If you cannot solve the problem from the hints given here, or the Unit has been physically damaged, call a qualified person, such as your dealer, for service.

Symptom	Possible Cause	Action
No sound is heard.	Connections are incorrect, or loose.	Check all connections and make corrections. (See pages 5 and 6.)
Impossible to record.	Cassette record protect tabs are removed.	Cover holes on back edge of cassette with tape.
Hard to listen to broadcasts because of noise.	The antenna is disconnected.	Re-connect the antenna securely.
	The loop antenna is too close to the system.	Change the position and direction of the loop antenna.
	The wire antenna is not properly extended and positioned.	Extend wire antenna to the best reception position.
The CD sound is not continuous.	The CD is scratched or dirty.	Clean or replace the CD.
Unable to operate the Remote.	The path between the Remote and the sensor on the Unit is blocked.	Remove the obstruction.
	The batteries have run down.	Replace the batteries.
The CD tray cannot be operated.	The main AC power cord is not plugged in.	Plug in the AC power plug.
The CD does not play.	The CD is upside down.	Put the CD in with the label side up.
Operations are disabled.	The built in microprocessor may malfunction due to external electrical interference.	Unplug the system then plug it back in.

Specifications

Amplifier

Output Power (IEC 268-3/DIN)
18 watts per channel, min. RMS, both channels driven, into 8 ohms at 1kHz with no more than 0.9% total harmonic distortion.

Speaker terminals
Speakers : 8~16 ohms

Tape deck

Systems : Dual cassette transports
Tape type : Deck A: Normal/CrO_2 selector
Deck B: Normal/CrO_2 auto-selector

Tuner

FM Tuner
Tuning Range : 87.5 ~ 108.0 MHz
Antenna Input : 75 ohms unbalanced

AM Tuner
Tuning Range : 522 ~ 1,629 kHz
Antenna : Loop antenna

Compact Disc Player

Type : 1-bit D/A converter
Wow and Flutter : Unmeasurable

General

Power Requirements : AC230V∿, 50Hz
Power Consumption : 70 Watts, 9.5 Watts in standby
Dimensions (Approx.) : 14-1/8 x 15-3/8 x 12"
360 (W) x 390 (H) x 305 (D) mm
Mass (Approx.) : 20.3 lbs./9.2 kg

Supplied Accessories

FM wire antenna ..... (1)
AM loop antenna ..... (1)
Remote control (RM-SME38U) ..... (1)
Batteries R03 (UM-4)/AAA(24F) ..... (2)
Antenna adaptor ..... (1)

Design and specifications subject to change without notice.

PREFACE

We would like to thank you for purchasing one of our JVC products DC-ME3. Before connecting this unit to the wall outlet, please read the instructions carefully to ensure that you obtain the best possible performance. If you have any questions, please consult your JVC dealer.

Read Me First

How this Manual Is Organized

This manual has major eight parts:
Preface
Setup
Remote Control
Receiver
CD (Compact Disc) Player
Cassette Deck
Recording
For Your Information

Reading this Manual

First, read Preface to Setup.
Preface describes the information about the DC-ME3 and features of each component.
Setup explains how to set up the DC-ME3.

Next, read Common Operations described in RECEIVER (see page 9) to help you to understand controls common to all the DC-ME3 functions.

Finally, read parts you want to know, actually operating the DC-ME3. Also look over others.

The operation procedure of each function is expressed with illustrations for both the center unit and remote control.

After you have finished reading this manual, put it away in a safe place for future reference.

The Information

There are the following two levels of Symbols on the information described in this manual:

CAUTION

Used to warn the readers of possible damage to the Unit when instructions are not strictly observed.

NOTE:
Information you should know. This note is available to smoothly operate the DC-ME3.

Important Cautions

Be sure to keep the following to use your DC-ME3 with safety and prevent troubles that may occur during operation of your DC-ME3.

Installation of the Unit
- ❑ Select a place which is level, dry and neither too hot nor too cold (between 5℃ and 35℃).
- ❑ Leave sufficient distance between the Unit and your TV.
- ❑ Do not use the Unit in a place subject to vibrations.

Power cord
- ❑ Do not handle the power cord with wet hands!
- ❑ When unplugging from the wall outlet, always pull the plug, not the power cord.
- ❑ A small amount of power (10watts) is consumed even in the STANDBY mode. To shut off the power completely, unplug the power cord from the outlet.

Malfunctions, etc.
- ❑ There are no user serviceable parts inside. If anything goes wrong, unplug the power cord and consult your dealer.
- ❑ Do not insert any metallic object into the Unit.

FEATURES

The DC-ME3 consists of three major sections: center unit, remote control, and speakers. The center unit is also divided into three sections: FM/AM receiver, double cassette deck, and CD player that enables you to set up to three CDs. So, everyone can easily enjoy powerful and high-quality sound.

Here are some of the things that make the DC-ME3 powerful and easy to use.

Center Unit

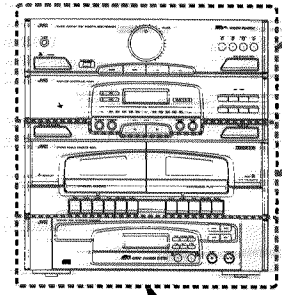

Receiver (For details on operation, see page 9.)

- SEA Graphic Equalizer : You can choose sound effects you like from four types : ROCK, JAZZ, CLASSIC, and FLAT.
- Tuner Preset : You can freely memorize up to 16 FM broadcasting stations and up to 8 AM broadcasting stations in the DC-ME3. Presetting broadcasting stations enables you to listen to them by only pressing their buttons.

Cassette Deck (For details on operation, see page 17.)

- Synchro Dubbing : You can easily record (dubbing) a CD or cassette tape while listening to the source sound.
- Continuous Play : You can successively play two cassette tapes; however, the DC-ME3 does not support the auto-reverse function.
- Dolby B Noise Reduction : You can largely reduce hiss-noise of cassette noise. This is available for recording and playing.

CD Player (For details on operation, see page 12.)

This player has a 3-disc carousel changer, and you can enjoy various plays.
- You can set up to three CDs on the carousel at the same time and play them successively.
- You can program up to 32 tracks in the order in which you want to listen to them.
- You can choose RANDOM, REPEAT, and INTRO to play CDs.
- While listening to one CD, you can replace the other CDs in the CD changer carousel.
- EDIT : The DC-ME3 can automatically edit tracks according to the length of cassette tape.

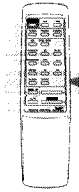

Remote Control

(For details on operation, see page 8.)
- Using the remote control unit supplied together with the DC-ME3, you can turn the POWER on and be in STANDBY mode and control other functions of the receiver and CD player from some distance.

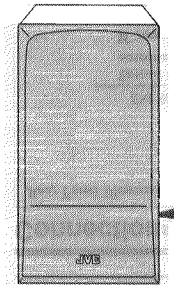

Speakers

- Each speaker uses three speakers including a 5-¼inch (13 cm) bass speaker, you can expect a good balance and dynamic sound.

SETUP

Confirm Supplied Accessories

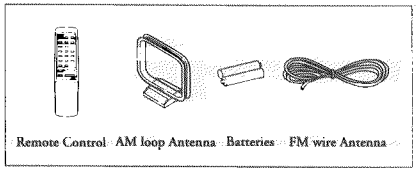

If anything is missing, contact your dealer immediately.

Remove All Locks

The CD changer carousel is locked in place to prevent damaged in transit. Remove all locks as follows:

1 Remove the transport fixing tapes at both sides of the CD player.

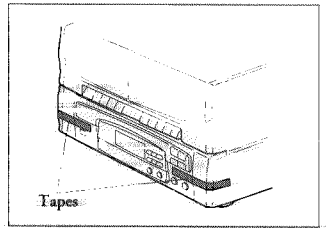

2 Carefully pull out the white caution label paper secured in the CD player by hand to open CD tray. Then, turn the two red transit locks clockwise and remove them.

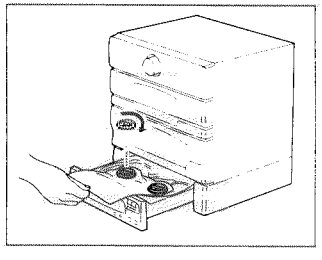

3 Push the CD tray by hand to close it. Save these transit locks in case you are moving it some distance.

CAUTION

Once you removed the tapes at the CD player, do not tip the center unit forward. If you do so, the CD tray will fall open.

CAUTION

When transporting the DC-ME3, be sure to fix the CD player with these locks. If you do not do so, the CD player mechanism may be damaged.

Locating

You can place the DC-ME3 in many different kinds of locations to suit your needs; just observe the cautions on page 3; keep away from moisture and heat; leave some space between the DC-ME3 and its surroundings, more than 7/16 inch (1 cm) at the sides of the DC-ME3 and 4 inch (10 cm) at the back.

Inserting Batteries in the Remote Control Unit

1 Open the lid.

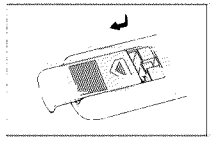

2 Insert two R03 (UM-4)/AAA (24F) dry cell batteries. Match the + and - indications to the diagram in the battery compartment.

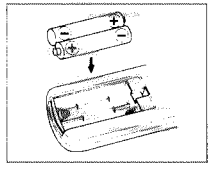

3 Close the lid.

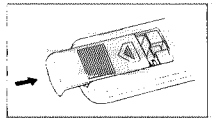

CAUTION

Observe proper handling of batteries. To avoid battery leakage or explosion:

- ❑ Remove batteries when the Remote will not be used for a long time.
- ❑ When you need to replace the batteries, replace both batteries at the same time with new ones.
- ❑ Don't use an old battery together with a new one.
- ❑ Don't use different types of batteries together.
- ❑ Don't expose batteries to heat or flame.

Connections

Rear Panel Illustration and Connections

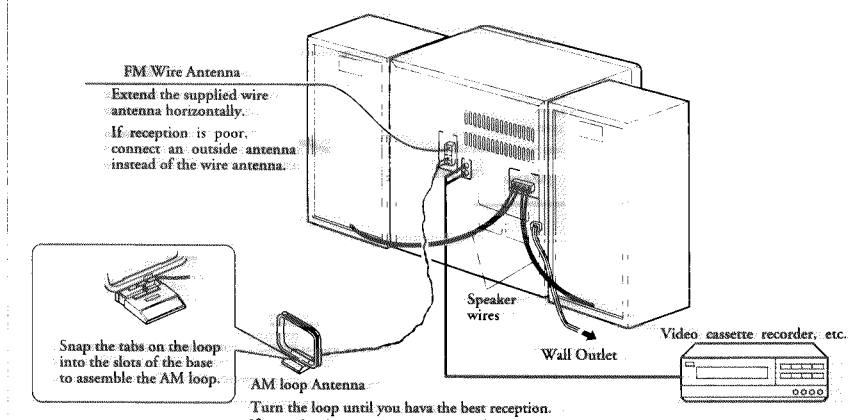

Connecting the FM antenna

Connect the supplied FM wire antenna to the FM 75-ohm terminal.

Fasten the wire antenna at the position that gives you the best FM reception.

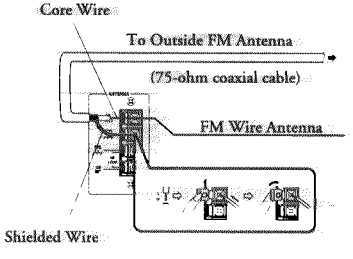

How to strip the 75-ohm coaxial cable.

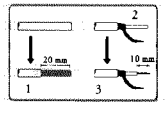

Connecting the AM loop antenna

Assemble the supplied AM loop antenna and connect it to the AM loop terminal.

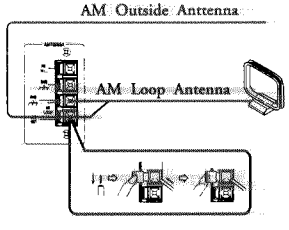

NOTE :

- Even when connecting an outside AM antenna, keep the indoor AM loop antenna connected.
- Make sure the antenna conductor do not touch any other terminals, connecting cords and power cord on the system. This could cause poor reception.

SETUP

Connecting the speakers

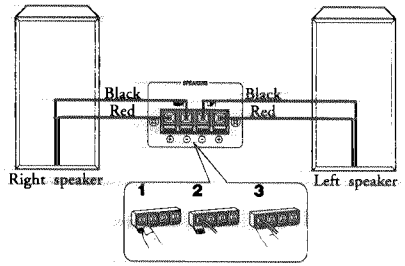

1 Open each terminal.

2 Insert the end of the speaker wire as shown in the figure. (Be sure to remove the insulation at the end of each wire first).

Connect the red (+) and black (-) wires of the right side speaker to the red (+) and black (-) terminals marked by RIGHT on the back panel.
Also, connect the red (+) and black (-) of the left side speaker to the red (+) and black (-) terminals marked by LEFT on the back panel.

3 Close the terminals to clamp the speaker wires firmly in place.

CAUTION

Use speakers with the same speaker impedance indicated by the speaker terminals on the back of the DC-ME3.

Connecting the AUX equipment (Option)

Connect the AUX equipment ouput to the AUX terminals on the rear panal, taking care about the left and right connectors. (The connection cord is not supplied.)

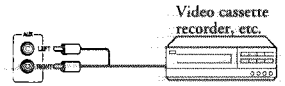

Plug in the Power Cord

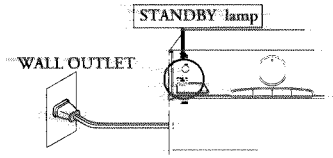

Plug the power cord to the wall outlet after all the connections above are completed. The red STANDBY indicator lamp then lights on.

Your system setup is complete.

REMOTE CONTROL

Remote Control Illustration

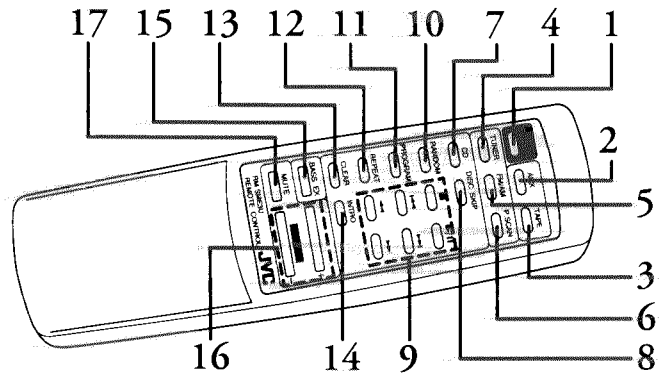

Part Names and Functions

1 POWER : Turns on the unit or puts it in STANDBY mode
2 AUX
3 TAPE
4 TUNER
} Sound source switching buttons
5 FM/AM
Select a radio band from FM1, FM2, or AM.
6 P.SCAN (Program scan)
You can choose stations you preset in advance.
This function is available only for the remote control.
7 CD: Sound source switching button
8 DISC SKIP: Moves disc position.
9 CD operation buttons
10 RANDOM : Plays tracks at random.
11 PROGRAM: Programs tracks.
12 REPEAT: Switches four repeat modes.
13 CLEAR
Pressing CLEAR resets the CD player program you set in advance.
This function is available only for the remote control.
14 INTRO: Plays only the beginning of each track.
15 BASS EX.: Bass extension
16 VOLUME control (+/-)
17 MUTE
If you press MUTE, no sound is heard. MUTE appears on the receiver display.Pressing MUTE again releases muting.
This function is available only for the remote control.

NOTE : The TAPE button on the remote control panel is only used to choose the tape deck. Other tape deck functions cannot be used by the remote control.

Remote Control Operable Range

The remote control can be used within a range of approx. 5 meters (16.4 feet) from the remote sensor, and within angles of up to approx. 30 degrees.

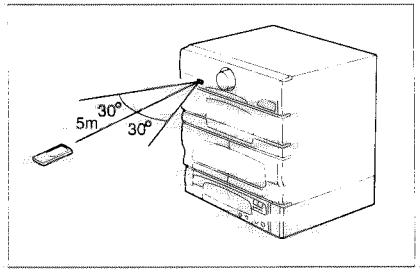

NOTE :
- If the remote control sensor window is in a position where it receives strong light such as sunlight or fluorescent light, control may not be possible.
- When the remote control is unable, replace the batteries with new ones.

RECEIVER

The receiver consists of a control amplifier and tuner.

Receiver Section

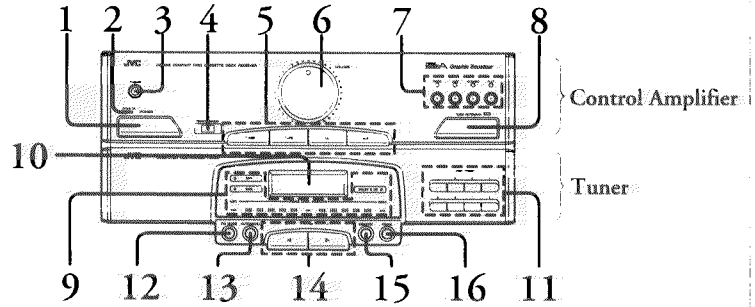

Receiver Display

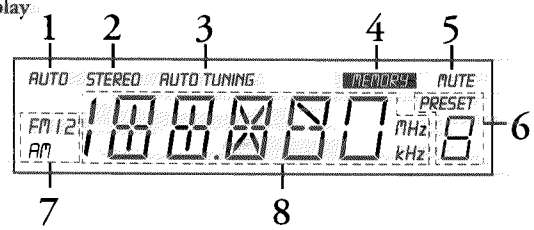

Part Names and Functions

Control Amplifier

1 POWER button : Turns on the DC-ME3 or puts it in STANDBY mode.
2 STANDBY lamp : Lights on in red when the POWER is STANDBY mode.
3 PHONES jack
4 REMOTE SENSOR window
5 Sound source switching buttons
6 VOLUME control
7 SEA graphic equalizer buttons with indicator lamps
8 BASS EXTENSION button

Tuner

9 Indicator lamps : REC, CrO_2, DOLBY B NR, POWER LEVEL INDICATOR
10 Receiver display
11 TUNER PRESET buttons : Used to preset broadcasting stations to these buttons.
12 FM MODE button : Switches stereo auto to mono and vice versa.
13 AUTO/MANU button : Switches auto tuning to manual tuning and vice versa.
14 TUNING (DOWN/UP) button
15 MEMORY button : Used to memorize broadcasting stations you want to preset.
16 FM/AM button : Switches between FM and AM in order FM1 ➡ FM2 ➡ AM.

Receiver Display

1 AUTO indicator : Disappears in monaural mode.
2 STEREO indicator : Appears when stereo broadcast is received in FM auto mode.
3 AUTO TUNING indicator : Appears in auto tuning mode.
4 MEMORY indicator : You can preset the radio band while MEMORY appears.
5 MUTE indicator : Appears when you press MUTE on the remote control unit.
6 PRESET number : Indicates the preset number you chose.
7 FM/AM indicator : Indicates the radio band (FM1, FM2, or AM).
8 Input mode (CD, TAPE, and AUX) and radio frequency : Indicates radio frequency by pressing TUNER of sound source switching buttons.

Common Operations

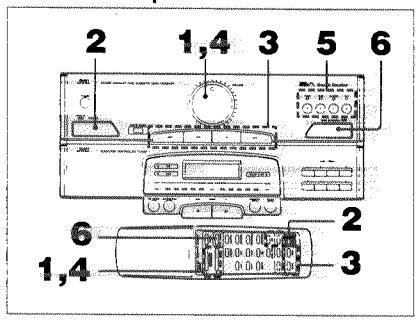

The procedure below is common to operate the tuner, cassette deck, and CD player.

1 Turn the VOLUME control counterclockwise to reduce before turning the POWER button on.

CAUTION

If do not do so, a high sound volume may damage both speakers and your hearing.

2 Press POWER on the upper-left of the control amplifier or remote control. The red STANDBY indicator lamp then goes off; the blue receiver display and CD display light on.

3 Press TUNER, TAPE, CD, or AUX to choose a sound source to which you want to listen from the tuner, cassette deck, CD player, and AUX (option).

4 Adjust the VOLUME.
The power level indicator that shows five power levels of the right and left channels respectively blinks according to the volume of the sound source.
Numbers 0 to 30 around the volume indicate volume levels.

5 Select a sound effect (SEA) you like from ROCK, JAZZ, CLASSIC, and FLAT.

6 Press BASS EXTENSION as required.

Listening with Headphones

A standard pair of headphones can be connected at the PHONES jack on the control amplifier. When the headphones are connected, no sound can be heard from the speakers. Be sure to turn down the volume before connecting or putting on headphones, as high volume can damage both headphones and your hearing.

Tuning in Stations

Make sure POWER is on.

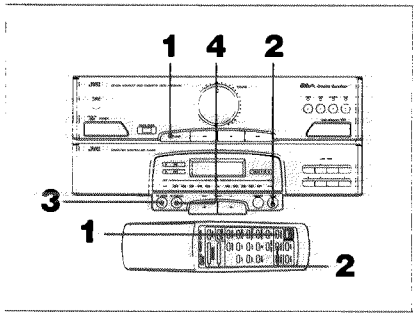

1 Press TUNER; the currently set frequency appears on the receiver display.

2 Press FM/AM to choose FM1 or FM2 when you listen to the FM radio and AM when you listen to the AM radio. The radio band you chose then appears on the receiver display.

3 Here, if you choose the FM radio, press FM MODE button. When AUTO appears, stereo and mono modes can automatically be set.

4 Press AUTO/MANU.
AUTO TUNING then appears on the receiver display in auto tuning mode and no message in manual tuning mode.

If you choose the AUTO tuning mode:
Press TUNING UP (higher frequencies) or DOWN (lower frequencies) once; the tuner will automatically search for a broadcasting station, and stop when the first is found. To stop the search, press AUTO/MANU again.

If you choose the MANU tuning mode:
Press TUNING UP or DOWN several times until the station you want to listen to appears on the receiver display.

Presetting Stations

Make sure that POWER is on.

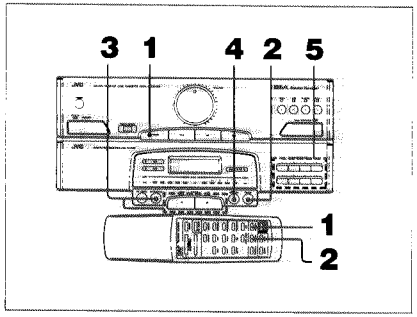

1 Press TUNER.

2 Press FM/AM to choose FM1, FM2, or AM.

3 As described in step 4 on page 10, press AUTO/MANU and then TUNING UP or DOWN to choose the station you want to preset while checking the frequencies that appear on the receiver display.

4 After the station you want to preset appears, press MEMORY. MEMORY then appears on the receiver display for 5seconds.

5 While MEMORY is displayed, press TUNER PRESET number (1 through 8) you want to set to the chosen station ; the number you pressed appears on the receiver display. Presetting a station is now completed.

Repeat steps 2 though 5 to preset another station. You can preset up to eight stations for each radio band (FM1, FM2, AM), i.e., 24 stations in all.

NOTE :
- If MEMORY disappears before pressing TUNER PRESET, perform this procedure from step 4 again.
- If you make a mistake in presetting, perform this procedure from step 2 or 3 again.

Listening to the Stations You Preset

Make sure POWER is on.

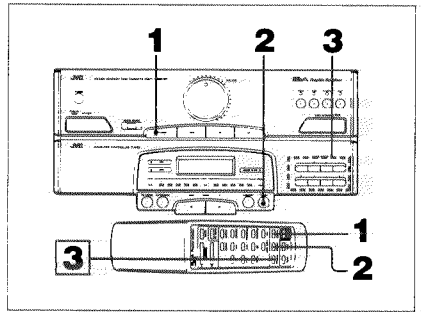

1 Press TUNER.

2 Press FM/AM to choose FM1, FM2, or AM.

3 Press TUNER PRESET (1 through 8) you want to choose.

3 Pressing P.SCAN on the remote control panel once automatically switches to the stations you preset in the order of 1 to 8.
Pressing P.SCAN again stops scanning.
Also, pressing P.SCAN successively twice scans to the next preset station quickly.

NOTE : You cannot memorize broadcasting stations using the remote control.

Listening to AUX

Press AUX , then turn the AUX equipment source power on.

CD (Compact Disc) PLAYER

CD Player Section

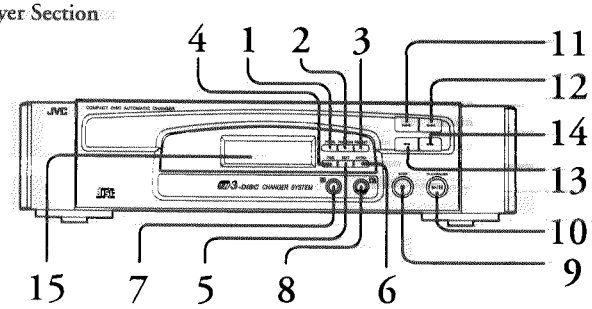

CD Display

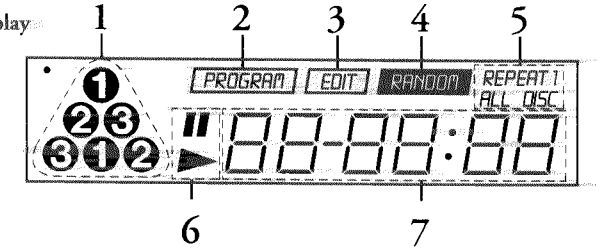

Part Names and Functions

CD Player Section

1 PROG. button: Used to specify the order of the tracks you want to play.
2 RANDOM button: Plays tracks at random.
3 REPEAT button: Has the following three functions:
REPEAT1 ... Repeats the track currently being played.
REPEAT DISC ... Repeatedly plays the CD.
REPEAT ALL DISC ... Repeats all the set CDs.
These functions are switched each time REPEAT is pressed.
4 TIME button
Pressing TIME during CD play displays the following in sequence:
1. Track running time
2. Remaining track time } Indicated by a minus
3. Remaining CD playing time } (-) values.
5 EDIT button: Used to automatically edit each track playing time according to the tape length during tape recording.
6 INTRO button: Plays only the beginning of each track.
7 DISC SKIP button: Clockwise turns the carousel 120 degrees to select a different disk to play.
8 OPEN /CLOSE button
9 STOP button
10 PLAY/PAUSE button
11 ⏮ button: Plays from the beginning of the track.
NOTE : Pressing ⏮ twice plays from the beginning of the preceding track.
12 ⏭ button: Plays from the beginning of the next track.
13 ◀◀ button: Goes back as long as you hold .
14 ▶▶ button: Advances as long as you hold down this button.
15 CD display
The following appear on the CD display:

CD Display

1 Disc tray number indicator
2 PROGRAM indicator
3 EDIT indicator
4 RANDOM indicator
5 REPEAT indicator
6 Play/Pause indicator
7 Track number/time display

Part names of the CD tray

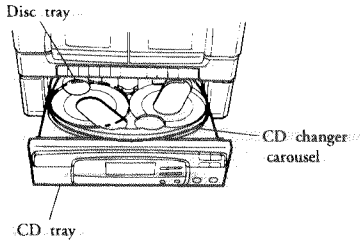

Setting CDs on the CD Tray

To Set CDs

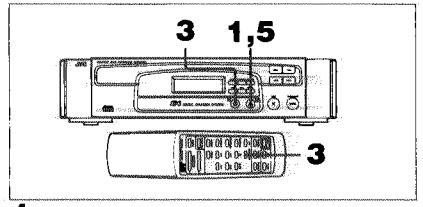

1 Press OPEN/CLOSE; the CD tray comes out toward you.

CAUTION

Do not put anything in the front of the CD tray.

2 Put the CD you want to listen to first on the left empty disc tray of the CD changer carousel and the next CD on the right with the label facing up. The CD on the left, numbered ❶ appears on the CD display and one on the right is numbered ❷.

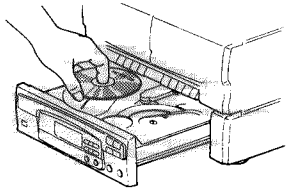

NOTE :
- When using an 8 cm CD, place it on the inner circle of the disc tray.
- It is possible to play only the disks marked by the following:

CAUTION

Place the disc correctly on the circle of the disc tray.

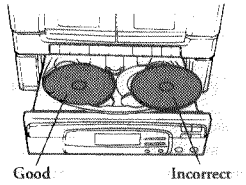

3 Press DISC SKIP.
The CD changer carousel turns clockwise; the CD you put first moves inward and an empty disc table appears on the right.

4 Put the last CD on the right empty disc tray. This CD, numbered ❸, appears on the CD display.

5 Press OPEN/CLOSE to close the CD tray.

NOTE
- If you do not set CDs as described in this procedure, CD numbers on the CD display will not appear in the order in which you put them.
- During play, you can open the CD tray to replace the existing CD with a new one or add a new CD on an empty disc tray.

CAUTION

- The CD tray must not remain opened.
- Never insert your hand in the inner part of the CD tray since a laser beam is radiated.
- Do not put a disc stabilizer, etc. other then CDs on the CD tray.
  It will result in trouble.

Relationship between CD Positions and CD Numbers

When you first press CD, CD numbers are arranged on the CD display as shown below. (Initial state)

However, if CD is already set on the innermost disc tray of the CD changer carousel, CD numbers are displayed as shown below.

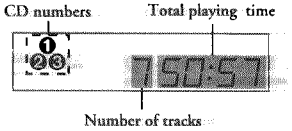

CD positions		CD numbers when you press PLAY
When setting one CD	➡	The CD is numbered ❶.
When setting two CDs	➡	The CD you put on the left is numbered ❶ and the one you put on the right ❷.
When setting three CDs	➡	The CD you first put on the left is numbered ❶.

The 2nd and 3rd discs are numbered like below.

Listening to CDs

The CD at the top of the CD number triangle is always played.

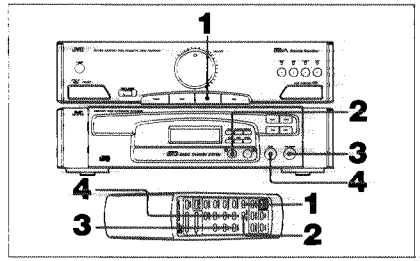

1 Press CD.

2 Press DISC SKIP until the number of the CD you want to listen to appears at the top of the CD number triangle of the CD display. The number of tracks and total playing time of the CD then appear on the CD display.

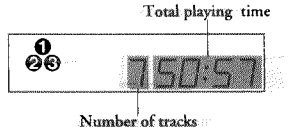

NOTE : If you do not press DISC SKIP, the DC-ME3 automatically plays the set CDs in sequence.

3 Press PLAY/PAUSE; the CD you chose is played.
► (play), track number, and running time of the track appear on the CD display.

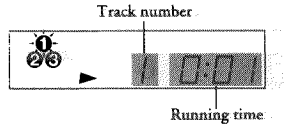

If you press PLAY/PAUSE during play, the CD play temporarily stops and II (pause) appears on the CD display. The number of the CD currently playing blinks at the top of the CD number triangle. Pressing PLAY/PAUSE again replays the CD.
The CD player automatically stops when the last track on the CD ends playing.

4 Press STOP to end play.

NOTE : During CD play, you can switch to other sound source, e.g., tuner or tape by pressing TUNER or TAPE. Switch back to CD as the sound source by pressing CD, the DC-ME3's Resume function automatically plays from the CD position prior to switching.

Searching for a Track and Part

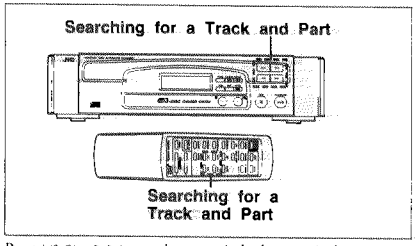

Press ⏮ or ⏭ ; tracks are switched successively.
Pressing ◀◀ or ▶▶ enables you to choose a part of a track.

Repeating CD Play

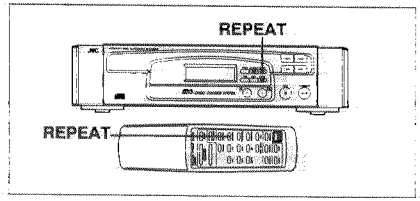

Press REPEAT several times to choose the repeat mode.

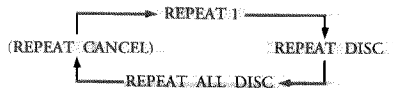

NOTE :
- You can only change the repeat mode when CD is the selected sound source.
- You can also repeat in program play and randam play modes. In this case, the rotation changes as follows :

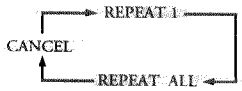

Random Play

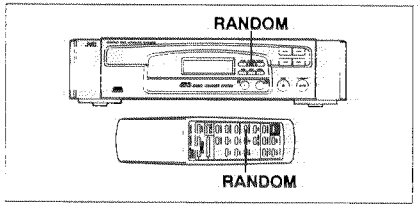

Press RANDOM; all tracks on the set CDs are played once at random.
To release random mode, press RANDOM again or press STOP.

Listening to only the Beginning of each Track (Intro Play)

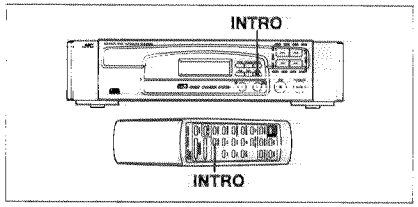

Press INTRO; the beginning of each track on all the CDs is played for 10 seconds.

Pressing INTRO again continues the play of the track you are listening to.

NOTE :
You can also use INTRO in progrm play and random play modes.

Playing only the Desired Tracks on CD (Program Play)

You can program tracks on all the CDs set in the CD tray.

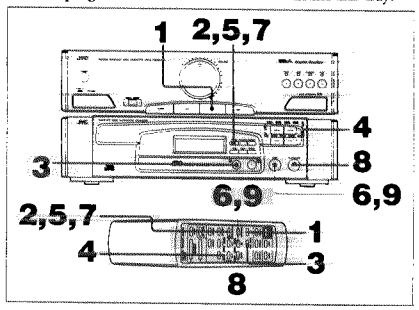

To Program Tracks

1 Press CD; CD appears on the receiver display.

2 Press PROG.; PROGRAM appears on the CD display.
The disc number is reset.
The disc on the left then changes to number ❶ and blinks.
Check the CD number and CD position.

3 Press DISC SKIP to choose CD you want to listen to.
The number of the CD you chose blinks on the CD display.

4 Press the ⏮ or ⏭ to choose the track number you want to include from the CD.

NOTE : You can set track numbers 1 to 20 from each disc.

5 Press PROG. again. The track you chose is then programmed and the CD display changes to the next program number : OP-02 .

Repeat steps 3 through 5 to program another track.

NOTE :
- You can program up to 32 tracks. The track added later is programmed following the already programmed tracks.
- To check the order of the programmed tracks, press TIME during display of the program mode.
  Each you press TIME, the disc, track, and program numbers appear on the CD display from the first.

6 Press STOP when you have programmed all the tracks you want to listen to.

NOTE :
Go to step 8 directly to play the programmed tracks without pressing STOP.

To Play the Programmed Tracks

7 Press PROG.
PROGRAM appears on the CD display and the programmed contents are called.

8 Press PLAY/PAUSE.
Tracks are played successively from the first programmed track number.
NOTE : When the programmed track number is not found on the set CD, it is skipped and the next one will be played if programmed.

9 Press STOP to end play.

NOTE : Pressing STOP only stops the play of the programmed tracks, the programmed contents are not cleared.

To Clear all of the Programmed Contents

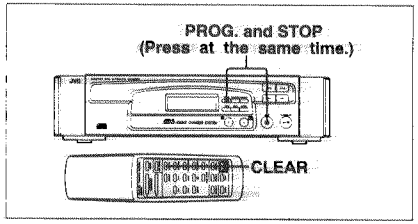

Press PROG. and STOP on the CD player at the same time or CLEAR on the remote control unit.

CASSETTE DECK

Cassette Deck Illustration

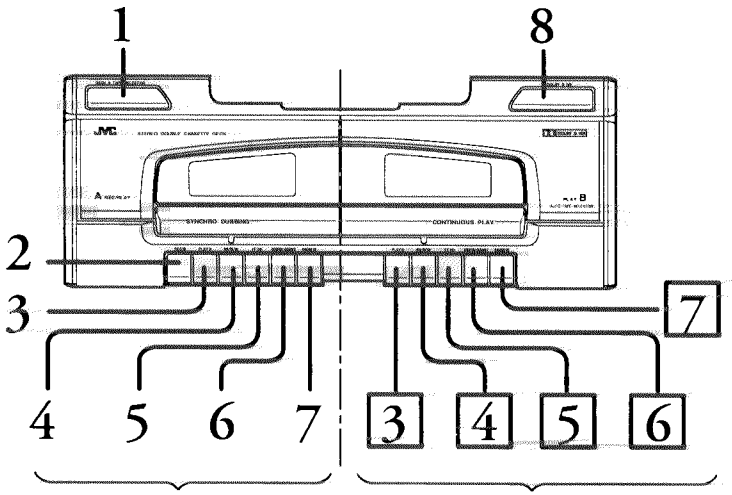

Part Names and Functions

1 DECK A TAPE SELECTOR: Used to select type II (CrO_2) tape.
2 REC ● button : Starts recording. The red RECORD lamp lights on.
3 PLAY ► button : Starts tape playing.
4 REW ◄◄ button : Rewinds tape.
5 FF ►► button : Fast forwards tape.
6 STOP ■ / EJECT ▲ button : Stops the tape play. Pressing this button again opens the tape compartment.
7 PAUSE II button : Pauses the tape play. Pressing this button again releases the pause state.
8 DOLBY B NR button : Press this button for recording and NR tape playing. The DOLBY B NR lamp lights on.

CAUTION

A tape recorded in DOLBY B NR mode must be played by setting the DOLBY B NR mode.

NOTE :
- Dolby B noise reduction manufactured under license from Dolby Laboratories Licensing Corporation.
- "DOLBY" and the double-D symbol are trademarks of Dolby Laboratories Licensing Corporation.

NOTE : You cannot operate the tape deck using the remote control.

To Set a Tape in Deck A or B

Press STOP / EJECT of deck A or B to open its tape compartment.

Insert a cassette tape in the deck with the tape side down and the side you want to play facing forward.

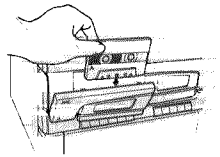

Push the tape compartment to close.

CAUTION

The use of C-120 (C-120 minutes turn around) or thinner tape is not recommended, since characteristic deterioration may occur and these tape easily jam in the pinch-rollers and the capstan.

To Play the Tape (Normal Play)

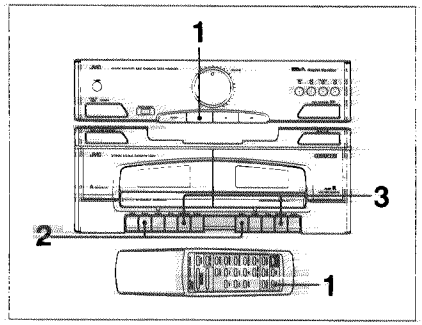

1 Press TAPE; TAPE appears on the receiver display.

NOTE :
- To play a type II (CrO_2) tape with deck A, press DECK A TAPE SELECTOR to light on the CrO_2 lamp. However, this is not necessary to use deck B because deck B has the auto tape selector function.
- To play a tape recorded in DOLBY B NR mode, press DOLBY B NR to light on the lamp. Other setting will result in change of the sound quality.

2 Press PLAY of the deck in which you inserted a tape; the tape starts playing.
If you want to interrupt the tape playing, press PAUSE. To release the pause state, press PAUSE again.

3 Press STOP/EJECT to stop the tape playing. Pressing STOP/EJECT again ejects the tape.
If you want to rewind and fast forward, press REW or FF respectively.

NOTE : If both decks A and B are used to play, B becomes the initial sound source.

To Continuously Listen to Tapes in both Decks A and B (Continuous Play)

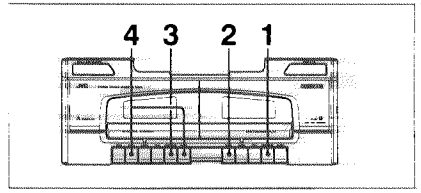

1 Press STOP/EJECT of deck B and insert the tape you want to listen to first in deck B.

2 Press PLAY of deck B; the tape on deck B will start playing.

3 Press STOP / EJECT of deck A and insert the tape you want to listen to next in deck A.

4 On deck A press PAUSE and then PLAY. The tape on deck A is then placed into pause state and automatically released when the tape on deck B reaches the end.

RECORDING

Before Recording

You can record all the DC-ME3 sound sources using cassette deck A. Deck B is only for playing. The recording levels are automatically adjusted according to source input levels.

NOTE : It should be noted that it may be unlawful to re-record pre-recorded tapes, records, or discs without the consent of the owner of copyright in the sound or video recording, broadcast or cable program and in any literary, dramatic, musical, or artistic embodied therein.

CAUTION

When the tape in deck B is in Play or Pause, you cannot record from the radio, CD, and AUX.

NOTE :

- Two small tabs on the back, one for side A and one for side B, can be removed to prevent erasure or re-recording.
- When you want to record again on a cassette tape with broken erasure prevention tabs, cover the hole with a double layer of adhesive tape. In this case, do not cover the type II (CrO_2) sensor hole.

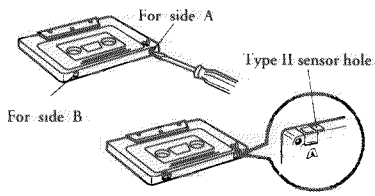

NOTE :You cannot use type Ⅳ (metallic) tape for recording.

To Set a Recording Tape in Deck A

Be sure to prepare a recording tape fitting to the source tape playing time.

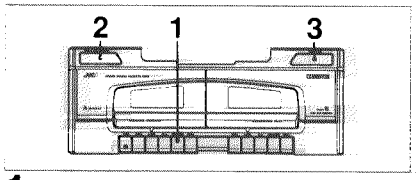

1 Press STOP/EJECT of deck A.
Insert a recording tape in deck A.

2 Press DECK A TAPE SELECTOR when using type II (CrO_2) tape. The red CrO_2 indicator lamp lights on.

3 Press DOLBY B NR; the red DOLBY B NR indicator lamp lights on.

To Record from the Radio

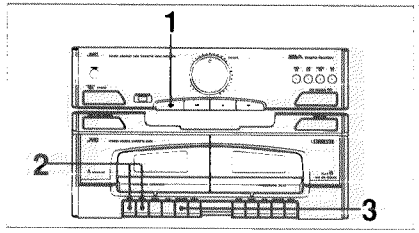

1 Press TUNER and choose a broadcasting station you want to record.

2 Press REC ; recording starts.

NOTE :

- PLAY is automatically pressed together with REC .
- Pressing PAUSE of deck A interrupts the recording.

3 Press STOP /EJECT to end the recording.

To Record from Another Tape (Dubbing)

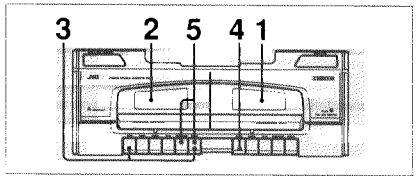

1 Insert a source tape in deck B.

2 Insert a recording tape in deck A.

NOTE : DOLBY B NR must be off because a DOLBY B NR tape is dubbed as NR remains set to ON.

3 Press PAUSE and then REC of deck A to place the recording tape into pause state.

4 Press PLAY on deck B; the tapes in decks A and B start winding at the same time. You can then listen to the another source.

5 After the tape in deck B stops, press PAUSE or STOP / EJECT of deck A to also stop the tape in deck A.

NOTE : The tape in deck A does not stop unless it reaches its end even if the tape in deck B reaches its end or is stopped.
To record the other side of the source tape, press STOP/EJECT and insert the tape, reversing its side.

To Record from CDs

Recording Tracks on CDs

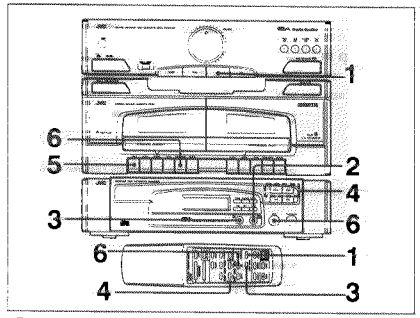

1 Press CD.

2 Press OPEN/CLOSE.
Put CDs in the CD tray. You can set up to three CDs.
Press OPEN/CLOSE again to close the CD tray.

3 Press DISC SKIP to choose CD.
Presss OPEN/CLOSE again to close the CD tray.

4 Press ⏮ or ⏭ to set the track you want to record.

NOTE :
To successively record multiple CDs, press REPEAT to light on the REPEAT ALL DISC lamp.

5 Press REC of deck A. The track is then played and recorded on the tape.

6 After the track recording is completed, press STOP on the CD player and STOP/EJECT on deck A.

Recording CDs with EDIT

The DC-ME3 automatically edits all the tracks so that they are completely recorded on the tape.

Use DISC SKIP to set the desired CD on the innermost disc tray. (See page 13.) The total playing time and number of tracks are displayed on the CD display.

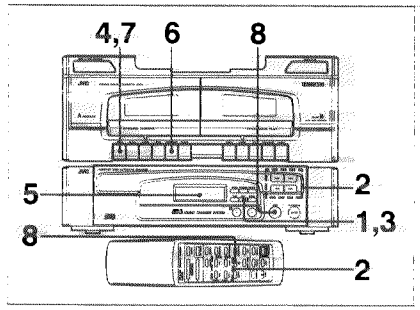

1 Press EDIT; EDIT appears on the CD display.

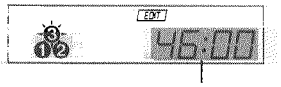

Total tape iength

NOTE : In this case, set a longer tape than the total playing time in deck A.

2 Press ⏮ or ⏭ to choose the total tape length of sides A and B; 46 ⇔ 54 ⇔ 60 ⇔ 90 appears on the CD display.
Pressing ⏮ or ⏭ enables you to fine-adjust the tape time in minute units (1 to 99).

3 Press EDIT again; the pause indicator, tape side, and total playing time of side A appear on the CD display.

4 Press REC . The CD starts 8 seconds after the tape starts. (SYNCHRO DUBBING)

5 After the recording of side A is completed, the CD enters pause mode. The tape side b and the remaining playing time then appear on the CD display to instruct you to prepare to record side B.

6 Press STOP/EJECT.
Reverse the tape side and re-insert in deck A.

7 Press REC ; the remaining tracks are recorded on side B.

8 Press STOP to release edit mode; EDIT disappears.

RECORDING

Recording the Programmed Tracks

First, program the tracks you want to record in order. (See page 16.)

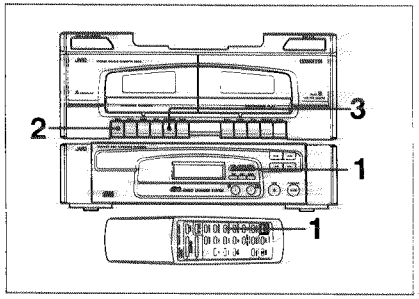

1 Press PROG.; PROGRAM appears on the CD display.

2 Press REC; tracks are recorded in the order you programmed them.

3 Press STOP/EJECT on deck A after the programmed play ends.

To Record from AUX

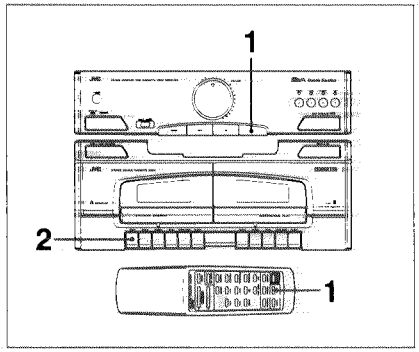

1 Press AUX.
Confirm that you can listen to the auxiliary equipment sound, e.g., video cassette recorder.

2 Press REC; the sound source will be recorded from AUX.

FOR YOUR INFORMATION

Care and Maintenance

In general, you will have the best performance by keeping your tapes, CDs, and the mechanism clean.

- Store tapes and CDs in their cases, and keep them in cabinets or on shelves.
- Keep the tape deck tape carriers and the CD tray closed when not in use.

Compact Discs

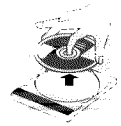

- Remove the CD from the case by holding it at the edges while pressing the center hole lightly.
- Do not touch the shiny surface of the CD, or bend the CD.

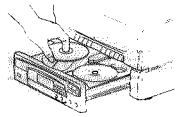

- Place the CD into the open tray with the label facing up.

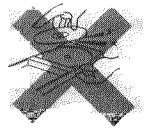

- Put the CD back in its case after use to prevent warping.
- Be careful not to scratch the surface of the CD when placing it back in the case.
- Avoid exposure to direct sunlight, temperature extremes, and moisture.

- A dirty CD may not play correctly. If a CD does become dirty, wipe it with a soft cloth in a straight line from center to edge.

CAUTION

Do not use any solvent (for example, conventional record cleaner, spray, thinner, benzine, etc.) to clean a CD.

About moisture condensation

Moisture may condense on the lens inside the unit in the following cases:

- After starting the heating in the room.
- In a damp room.
- If the unit is brought directly from a cold to a warm place.

Should this occur, the unit may malfunction. In this case, leave the unit turned on for a few hours until the moisture evaporates, unplug the AC power cord, and then plug it in again.

Cassette Tape

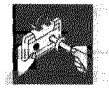

- If the tape is loose in its cassette, take up the slack by inserting a pencil in one of the reels and rotating.
- If the tape is loose it may get stretched, cut, or caught in the cassette.

- Do not touch the tape surface.

- Do not store the tape:
  - -In dusty places
  - -In direct sunlight or heat
  - -In moist areas
  - -On a TV or speaker
  - -Near a magnet

Cassette Deck

- If the heads, capstans, and pinch-rollers of the tape deck become dirty, the following will occur:
  - -Impaired sound quality
  - -Discontinuous sound
  - -Fading
  - -Incomplete erasure
  - -Difficulty recording

- Clean the heads, capstans, and pinch-rollers of both decks A and B using a cotton swab moistened with alcohol.

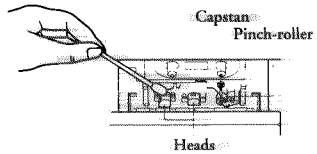

- If the heads become magnetized, they will produce noise or loose high frequencies.

- To demagnetize the heads, turn off the system, and use a head demagnetizer (available at electronics and record shops).

Description of Major LSIs

■ CXA1782BQ (IC01) : RF SIGNAL PROCESSING SERVO AMP.

1. Terminal Layout

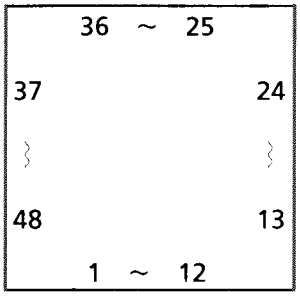

2. Description

Pin No.	Symbol	I/O	Description	Pin No.	Symbol	I/O	Description
1	FEO	I	Focus error amplifier output. Connected internally to the FZC compatator input.	24	SENS	O	Output FZC, DFCT, TZC, gain, balance, and others according to the command from CPU.
2	FEI	I	Focus error input.	25	FOK	O	Focus OK comparator output. (DC voltage: 10kΩ load resistance is connected.)
3	FDFCT	I	Capacitor connection pin for defect time constat.	26	CC2	O	Input pin for the DEFECT bottom hold output capacitance-coupled.
4	FGD	I	Grand this pin through a capacitor when decreasing the focus servo high-frequency gain.	27	CC1	I	DEFECT bottom hold output.
5	FLB	I	External time constant setting pin for increasing the focus servo low frequency.	28	CB	I	Connection pin for DEFECT bottom hold capacitor.
6	FE O	O	Focus drive output.	29	CP	I	Connection pin for MIRR hold capacitor. MIRR comparator non-inversed input.
7	FE M	I	Focus amplifier negative input pin.	30	RF I	I	Input pin for the RF summing amplifier output capacitance-coupled.
8	SRCH	I	External time constant setting pin for generating focus servo waveform.	31	RF O	O	RF summing amplifier output Eye pattern check point.
9	TGU	I	External time constant setting pin for switching tracking high-frequency gain.	32	RF M	I	RF summing amplifier inversed input. The RF amplifier gain is determined by the resistance connected between this pin and RFO pin.
10	TG2	I	External time constant setting pin for switching tracking high-frequency gain.	33	LD	O	APC amplifier output.
11	FSET	I	High cut off frequency setting pin for focus and tracking phase compensation amplifier.	34	PHD	I	APC amplifier input.
12	TA M	I	Tracking ampllifier nagative input pin.	35,36	PHD1 PHD2	I	RF I-V amplifier inversed input. Connect these pins to the photo diode A+C and B+D pins.
13	TA O	O	Tracking drive output.	37	FE BIAS	I	Bias adjustment of focus error amplifier.
14	SL P	I	Sled ampllifier non-inversed input.	38,39	F,E	I	F I-V and E I-V amplifier inversed input. Connect these pins to the photo diodes F and E.
15	SL M	I	Sled ampllifier nagative input pin.	40	EI	--	I-V amplifier E gain adjustment. (When not using automatic balance adjustment.)
16	SL O	O	Sled drive output.	41	VEE	--	Power supply.
17	ISET	I	Setting pin for Focus search, Trackjump, and Sled kick current.	42	TEO	O	Tracking error amplifier output.
18	VCC	--	Power supply.	43	LPFI	I	Comparator input for balance adjustment. (Input from TEO through LPF.)
19	CLK	I	Serial data transfer clock input from CPU. (no pull up resistance.)	44	TEI	I	Tracking error input.
20	XLT	I	Latch input from CPU. (no pull up resistance.)	45	ATSC	I	Window comparator input for ATSC detection.
21	DATA	I	Serial data input from CPU. (no pull up resistance.)	46	TZC	I	Tracking zero-cross comparator input.
22	XRST	I	Reset input: resets at Low. (no pull up resistance.)	47	TDFCT	I	Capacitor connection pin for detect time constant.
23	C.OUT	O	Track number count signal output.	48	VC	O	(VCC+VEE)/2 DC voltage output.

3. Block Diagram

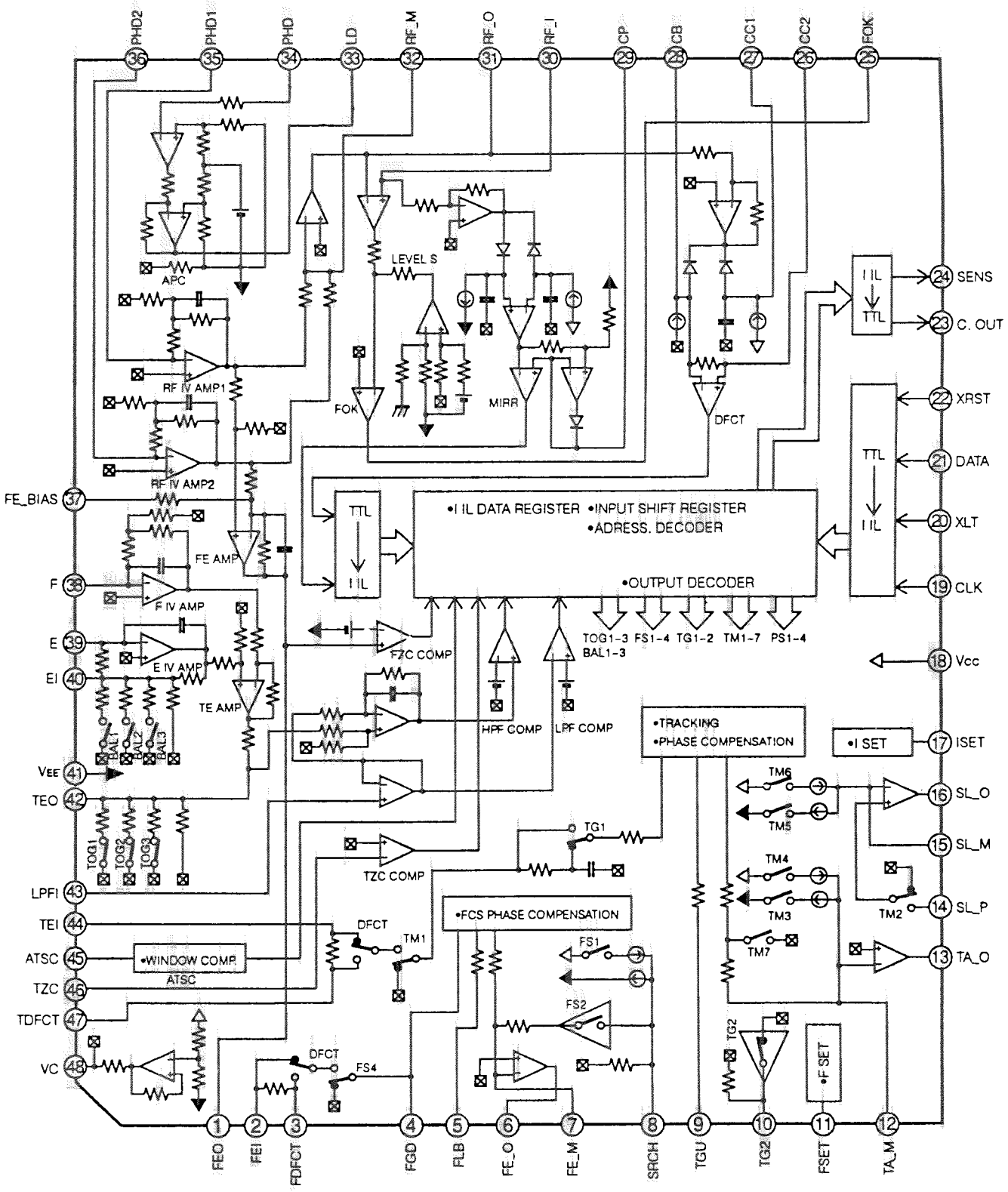

■ CXD2518Q(IC04) : DIGITAL SIGNAL PROCESSOR W/DAC

1. Terminal Layout

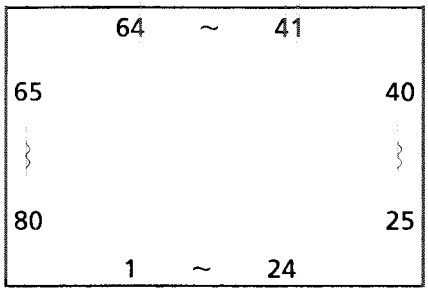

2. Block Diagram

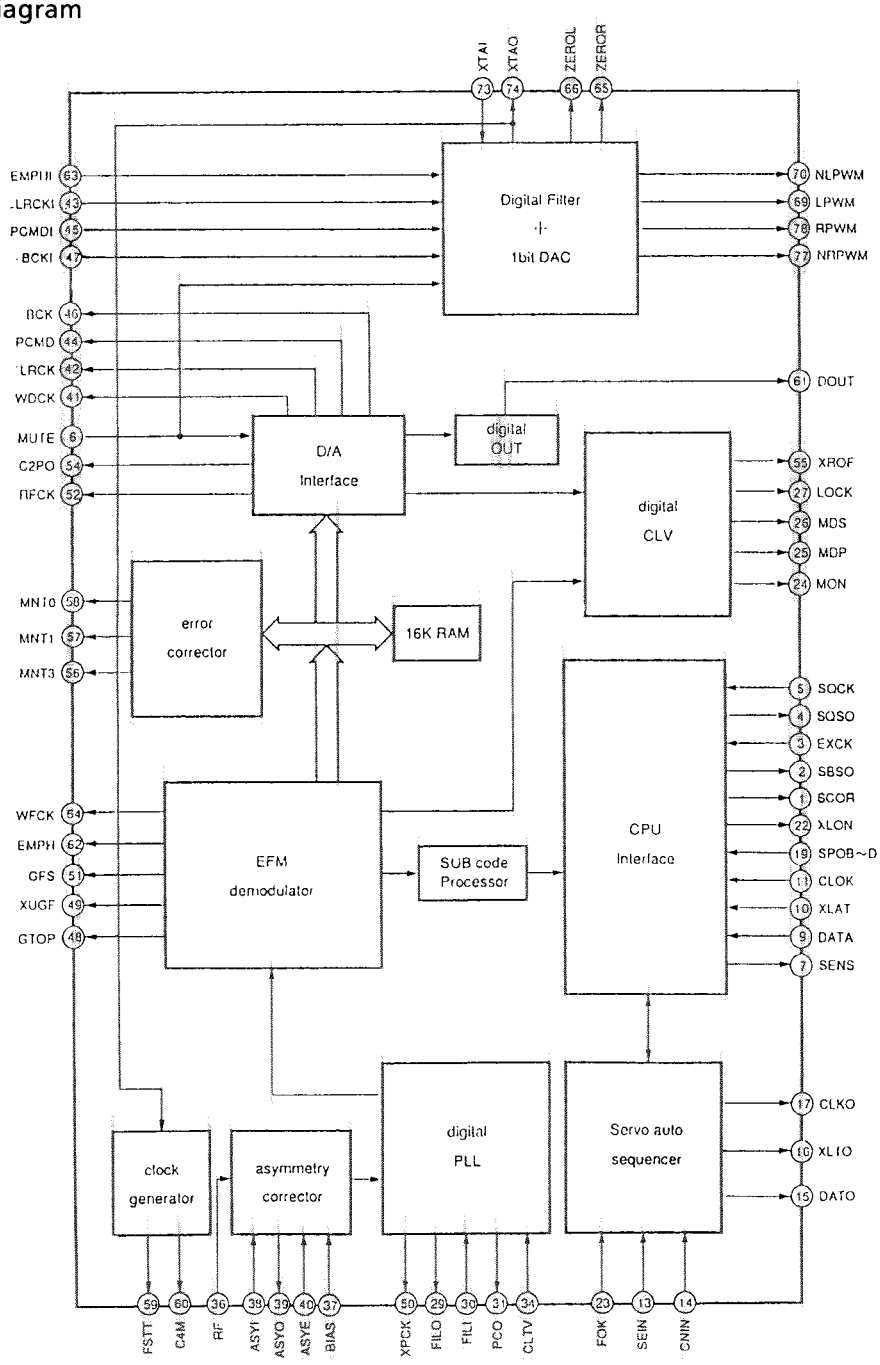

3. Pin Functions

Pin No	Symbol	I/O	Function	Pin No	Symbol	I/O	Function
1	SCOR	O	Turns "H" when subcode Sync S0 or S1 is detected.	36	RF	I	EFM signal input.
2	SBSO	--	Non connection	37	BIAS	--	Conneced to V_{DD}
3	EXCK	I	Clock input for reading SBSO.	38	ASYI	I	Asymetry a revised circyit compalate voltage input
4	SQSO	O	Serial outputs 80-bit Sub Q	39	ASYO	O	EFM full-swing output.
5	SQCK	I	Clock input for reading SQSO.	40	ASYE	I	L: Asymetry revise OFF H: Asymetry revise ON
6	MUTE	I	"H" for muting, "L" for release.	41	WDCK	--	Non connection
7	SENS	O	SENS output to CPU.	42	LRCK	O	D / A interface for 48-bit slot. LR clock f= Fs.
8	XRST	I	System reset. "L" for resetting.	43	LRCKI	I	LR clock input to DAC.
9	DATA	I	Inputs serial data from CPU.	44	PCMD	O	D/A interface, serial data (2'SCOMP, MSB first)
10	XLAT	I	Latches serial data input from CPU at falling edge.	45	PCMDI	I	Audio data input to DAC. (48bit slot)
11	CLOK	I	Inputs serial data transfer clock from CPU.	46	BCK	O	D/A interface, bit clock.
12	VSS	--	GND	47	BCKI	I	Bit clock input to DAC. (48bit slot)
13	SEIN	I	Inputs SENS from SSP.	48~50		--	Non connection
14	CNIN	I	Inputs track jump count signal.	51	GFS	O	GFS output
15	DATO	O	Outputs serial data to SSP.	52		--	Non connection
16	XLTO	O	Latches serial data output to SSP at falling edge.	53	VSS	--	GND
17	CLKO	O	Outputs serial data transfer clock to SSP.	54~61		--	Non connection
18	TEST2	I	Test pin (Normally at VDD)	62	EMPH	O	Emphasis ON :H, OFF:L
19	SPOB	I	μ-com expansion interface (input=B)	63	EMPHI	I	De-emphasis control of DAC. ON:H, OFF:L
20	SPOC	I	μ-com expansion interface (input=C)	64~66		--	Non connection
21	SPOD	I	μ-com expansion interface (input=D)	67	DTSI	I	Test pin1, Normally at "L".
22	XLON	--	Non connection	68	VDD	--	Digital power supply for DSP.
23	FOK	I	Focus OK input pin. Used for SENS output and servo auto sequencer.	69	LPWM	O	Lch PWM output. (positive)
24	MON	--	Non connection	70	NLPWM	O	Lch PWM output. (negative)
25	MDP	O	Output for spindle servo control.	71	ADD2	--	Power supply for Lch PWM driver.
26,27		--	Non connection	72	ADD3	--	Power supply for X'tal.
28	TEST	I	Test pin (Normally at 0V)	73	XTAI	I	Input to 16.9344MHz Xtal oscillation circuit or 33.8688MHz input.
29	FILO	O	Output of filter for masterPLL (Slave=Digital PLL)	74	XTAO	O	Output of 16.9344 MHz Xtal oscillation circuit.
30	FILI	I	Input to filter for master PLL.	75	AVSS3	--	GND for X'tal.
31	PCO	O	Output of charge pump for master PLL.	76	AVSS2	--	GND for Lch PWM driver.
32	VDD	--	Digital power supply for DSP.	77	NRPWM	O	Rch PWM output. (negative)
33	AVSS	--	Analog GND for DSP.	78	RPWM	O	Rch PWM output. (positive)
34	CLTV	I	VCO control voltage input for master PLL.	79	DTS2	I	Test pin2 for DAC, Normally at "L".
35	AVDD1	--	Analog power supply for DSP.	80	DTS3	I	Test pin3 for DAC, Normally at "L".

■ UPD 75312-504-282 (IC03) : SYSTEM CONTROLLER

1. Terminal Layout

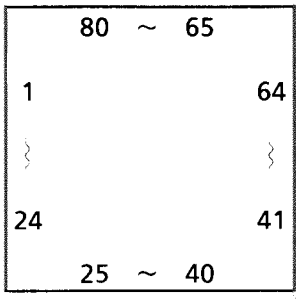

2. Block Diagram

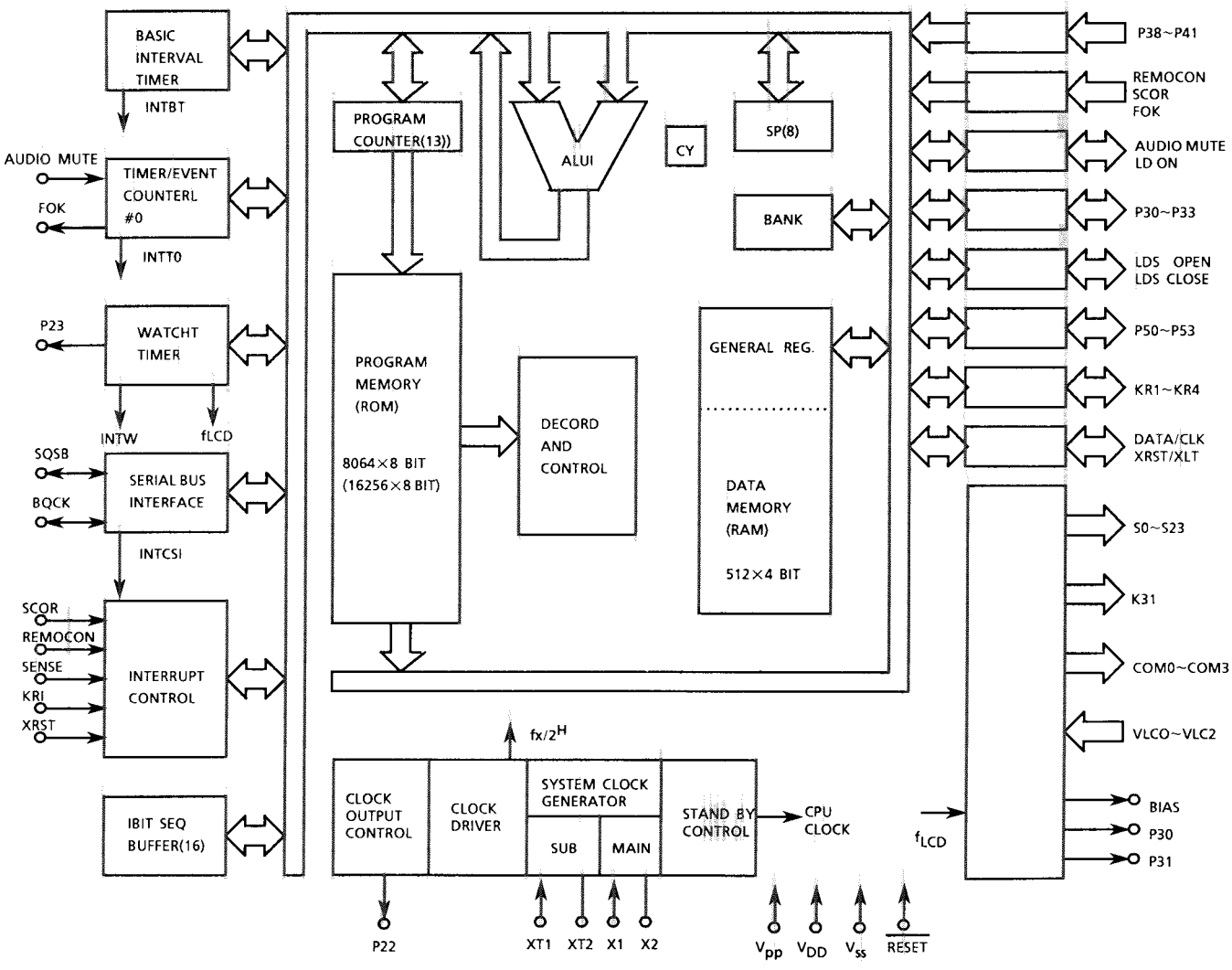

3. Pin Function

Pin No.	Symbol	I/O	Function
1~9	S12~S20	O	This is LCD segment output
10~12	S21~S23	—	Non connection
13~16	K31~K34	O	Key matrix output
17	EMPHA313	—	Non connection
18	MUTE	O	This is a terminal Lsi mute signal output
19	SYNC1	—	Non connection
20	SYNC2	—	Non connection
21	COM0	O	Comon signal output terminal
22	COM1	O	Comon signal output terminal
23	COM2	O	Comon signal output terminal
24	COM3	—	Non connection
25	BIAS	O	This is a terminal for cut the divde resistor of fixing the outside
26	VLC0	—	This is a terminal of LCD driver power suplly
27	VLC1	—	This is a terminal of LCD driver power suplly
28	VLC2	—	This is a terminal of LCD driver power suplly
29	OPEN	I	This is a terminal of drower open switch detected
30	SCLOSE	I	This is a terminal of drower close switch detected
31	SENS1	I	This is a terminal of turn table mode switch detected
32	DISC	I	This is a terminal of CD sensor
33	Vss	—	Connected to GND
34	LD OPEN	O	This is a terminal of drawer motor open output
35	LD CLOSE	O	This is a terminal of drawer motor close output
36	MOVE1	—	Non connection
37	MOVE2	O	This is a terminal of turn table drive (disc change)
38	GFS	I	This is a terminal of GFS input
39	SQCK	O	Clock output for reading SBSO
40	SO	—	Non connection
41	SUBQ	I	Serial inputs 80-bit Sub Q
42	SCOR	I	Tuns "H"when subcode Sync S0 or S1 is detected
43	REMOCON	I	This is an input terminal for remote signal.
44	SENSE	—	SENCE input from Lsi
45	FOK	—	This is a terminal of Focus OK comparator input
46	AUDIO MUTE	I	This is a terminal of Audio mute signal input
47	LD ON	O	This is a terminal of Lazer ON signal output
48	P22	—	Non connection
49	P23	—	Non connection
50	P30	—	This is a terminal of +5V (for digital)
51	P31	O	Connected to GND
52	P32	I/O	This is a terminal of track jump control signal
53	P32	O	Connected to GND
54	VDD	—	This is a terminal of power suplly
55	XT1	—	Connected to GND
56	XT2	—	Non connection
57	NC	—	Non connection
58	X1	I	This is a X'tal of main system clock oscllation
59	X2	I	This is a X'tal of main system clock oscllation
60	KR1	I	This is a Key matrix input
61	KR2	I	This is a Key matrix input
62	KR3	I	This is a Key matrix input
63	KR4	I	This is a Key matrix input
68	DATA	I	This is a sirial data output terminal for Lsi
65	CLK	O	This is a terminal of outputs serial data transfar clock for Lsi
66	XLT	—	This is Latches serial data output for Lsi at falling edge
67	XRST	—	This is a terminal of system reset signal output. "L" for ressetting
68	RESET	O	This is a system reset input terminal. "L" for ressetting
69~80	S0~S10	—	This is LCD segment output

LA1831M (IC102) : FM AM IF AMP & detector, FM MPX Decorder

1. Terminal Layout

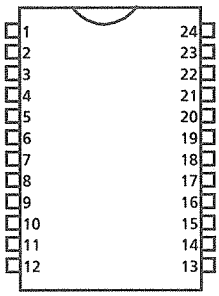

2. Pin Function

Pin No.	Symbol	I/O	Function
1	FM IF	I	Bypass of FM IF
2	AM MIX	O	This is an output terminal for AM mixer.
3	REG	—	Register value between pin4 and pin28 desides the frequency width of the input signal.
4	AM IF	I	Input of AM IF Signal.
5	GND	—	This is the device ground terminal.
6	TUNED LED	O	Tuned indicator output. Stereo : "L", Mono : "H"
7	STEREO LED	O	Stereo indicator output. Stereo : "L", Mono : "H"
8	FM DET	—	FM detect transformer.
9	VCC	—	This is the power supply terminal.
10	FM/AM IF //MUTE	O/I	When the signal of IF REQ of IC121(LC7218) appear, the signal of FM/AM IF output. //Muting control input.
11 12		O/I	S Change over the FM / AM input. "H" : FM, "L" : AMMeter output and adjust AM SD sensitivity.
13	MONO/ST	O	Stereo : "H", Mono : "L"
14	L OUT	O	Left channel signal output.
15	R OUT	O	Right channel signal output
16	MPX IN	I	Mpx input terminal.
17	MPX VCO	I	Voltage controlled oscillator terminal.
18	DET OUT	O	AM/FM detection output.
19	AM DET	—	AM low cut adjustment.
20	AM AGC	I	This is an AGC voltage input terminal for AM.
21	AM RF-IN	I	This is an input terminal for AM RF signal.
22	AFC	—	This is an output terminal of voltage for FM-AFC.
23	AM OSC	—	This is a terminal of AM Local oscillation circuit.
24	OSC BUFFER	O	AM Local oscillation Signal output.

3. Block Diagram

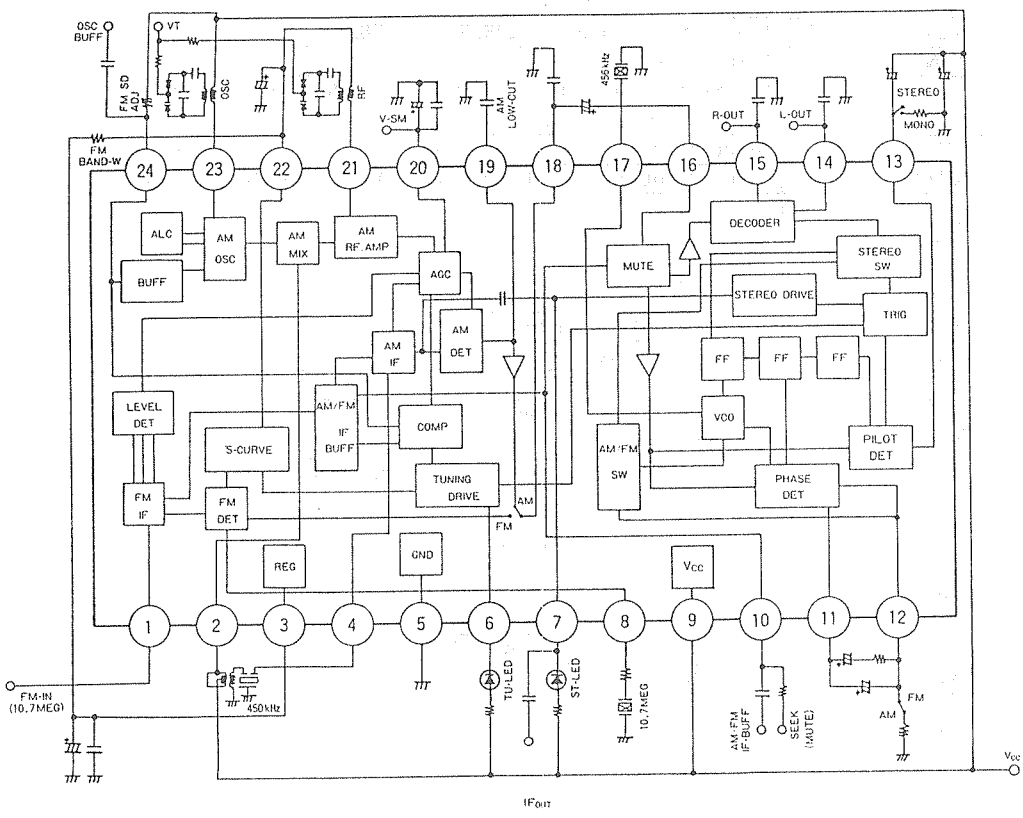

■ LC72322-8966 (IC701) : SYSTEM CONTROLLER

1. Terminal Layout

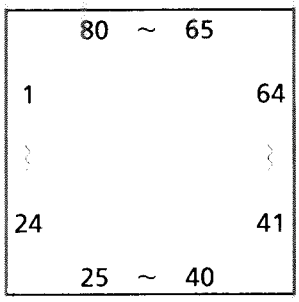

2. Terminal Function

Pin No.	Symbol	I/O	Function	Active
1	XIN	I	X'tal oscillator connected (4.5MHz)	—
2	TEST1	O	Connected to GND	—
3	REM	I	Remote signal input	L
4	$\overline{\text{STEREO}}$	I	It is "L" when LCD indication "ST"	L
5,6	K5,K4	I	Diode matrix input	H
7	CD	O	CD control output(Gearing the function switch)	H
8	$\overline{\text{FM}}$	O	It is a terminal for every band power suplly select	L
9	$\overline{\text{MW}}$	O	It is every band power suplly for select	L
10	VOL	O	Volume LED output	H
11	VOL U	O	It is "H" when up key is push	H
12	VOL D	O	It is "H" when Down key is push	H
13	MO/ST	O	Selected MONO and STEREO MONO :"H" STEREO :"L"	H
14	S.BASS	O	Super bass output Initial="L" All function toggle moved	L
15	CE	O	It is serial data line of LC7535 and LC7821	H
16	DO	O	It is serial data line of LC7535 and LC7821	H
17	CLK	O	It is serial data line of LC7535 and LC7821	H
18	IFCNT	O	IF signal output	H
19	NOR/CrO2	O	Normal and CrO_2 select Initial="L" All function toggle move	H
20	PWR OUT	O	Power control terminal	H
21	AMUTE	O	Audio mute signal /Function mute	H
22	DOLBY	O	Dolby NR output Initial="L" All function toggle move	H
23~30	T0~T7	O	Output signal for key scan	H
31	V_{DD}	I	Power suplly (+5V)	—
32~35	K0~K3	I	Key matrix input	H
36~63	S1~S28	O	LCD segment driver terminal	—
64	COM1	O	LCD comon driver terminal	—
65	COM2	O	LCD comon driver terminal	—
66	$\overline{\text{INT}}$	I	Remotocontorol input	L
67	$\overline{\text{HOLD}}$	I	It is back up mode when "L"	L
68	RES	—	Connected to V_{SS}	—
69	SD	I	It is communicate signal to catch a radoiostation when auto tuning	L
70	HCTR	I	FM IF signal input	—
71	LCTR	I	AM IF signal input	—
72	SNS	I	It is transefer data to LC7821 and LC7535 when "H"	H
73	V_{DD}	—	This is a terminal of Audio mute signal input	—
74	FMIN	I	Local oscllation input from FM VCO	—
75	AMIN	I	Local oscllation input from AM VCO	—
76	V_{SS}	O	Connected to GND	—
77	E01	O	Phase compare output (Non connection)	—
78	E02	O	Phase compare output	—
79	TEST2	O	Connected to GND	—
80	XOUT	I	X'tal oscillator connected (4.5MHz)	—

Disassembly Procedures

(1) Top cover removal
1. Remove 7 screws Ⓐ on the rear side and 2 screws Ⓑ on both sides of the cover.
2. Remove the cover.

(2) Rear panel and Power trans removal
1. Remove the top cover.
2. Remove the 5 screws Ⓒ.
3. Remove the 4 screws Ⓓ.
4. Disconnect the CN508 and Cut the tie band holding the wire.
5. Remove the rear panel with the Power trans.

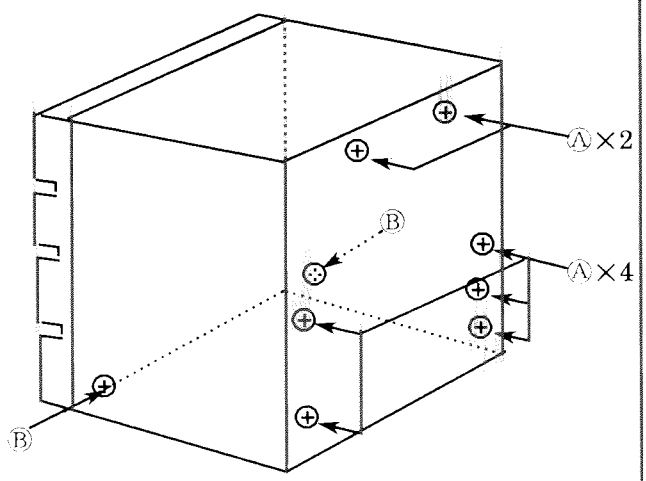

Fig1

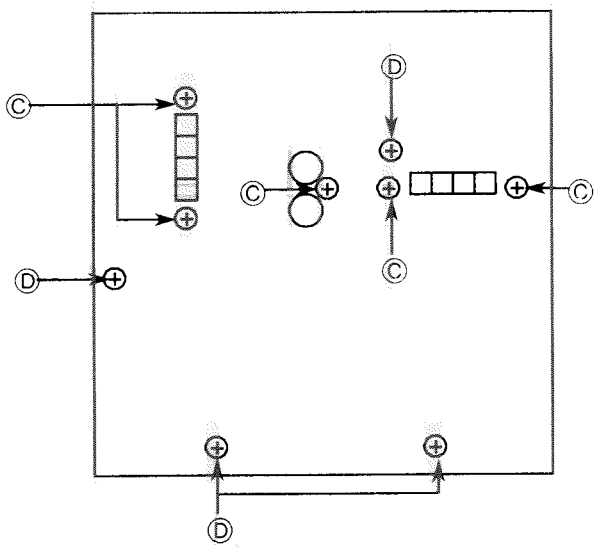

Fig2 Rear view

(3) Main PCB removal
1. Remove the (1)and(2).
2. Disconnect the TP1,TP2,CN302,CN303,CN304,CN305,CN307,CN501,CN502,CN504,CN102.
3. Cut the tie band.
4. Remove the screw Ⓓ and 2 screws Ⓐ.
5. Remove the Main PCB.

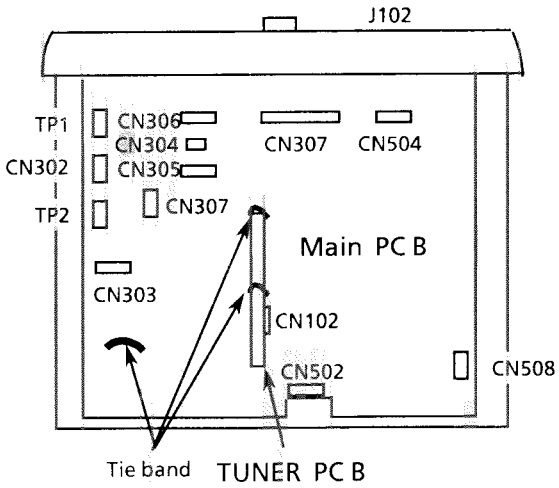

Fig 3 Top view

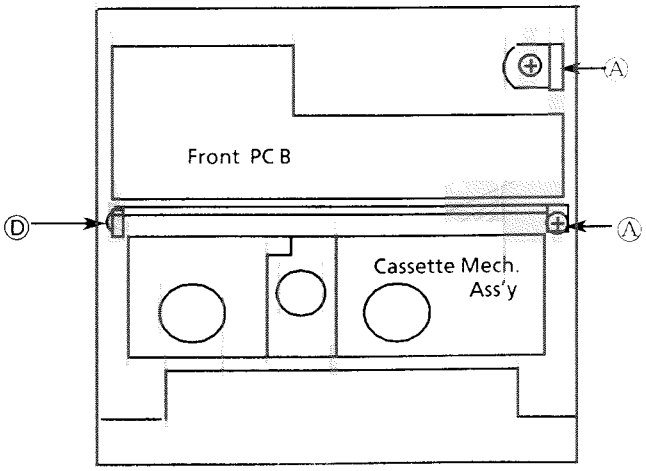

Fig 4 Front panel Rear view

(4) Tuner PCB removal
1.Remove the main PCB.
2.Remove the screw Ⓓ holding the Tuner PCB.
3.Remove the Tuner PCB.

(5) Power IC removal
1. Remove the Main PCB.
2. Remove the 3 screws Ⓔ holding the bracket.
3. Unsolder the Power IC pins.
4. Remove the Power IC.

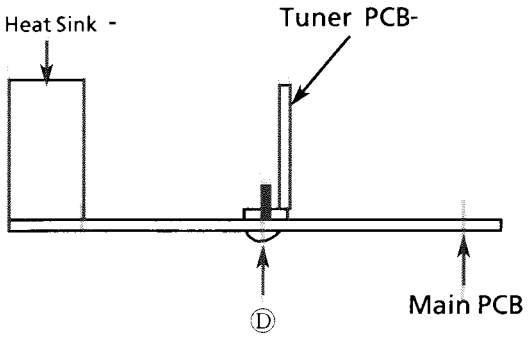

Fig 4 Main PCB view

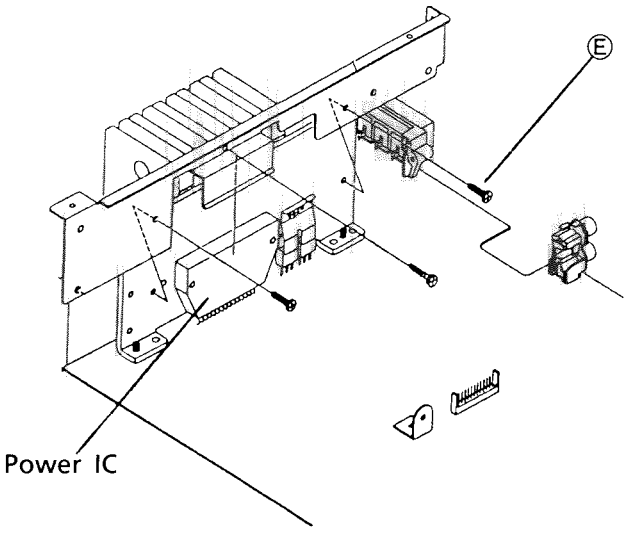

Fig 5 Main PCB view

(6) Main Volume removal.
1. Remove the top cover.
2. Disconnect the CN504.
3. Pull the Volume knob and Remove the 2 screws Ⓕ holding the Main Volume ass'y.

(7) Front PCB removal
1. Remove the top cover.
2. Disconnect the CN501,CN502.
3. Remove the 11 screws Ⓒ.
4. Remove the Front PCB.

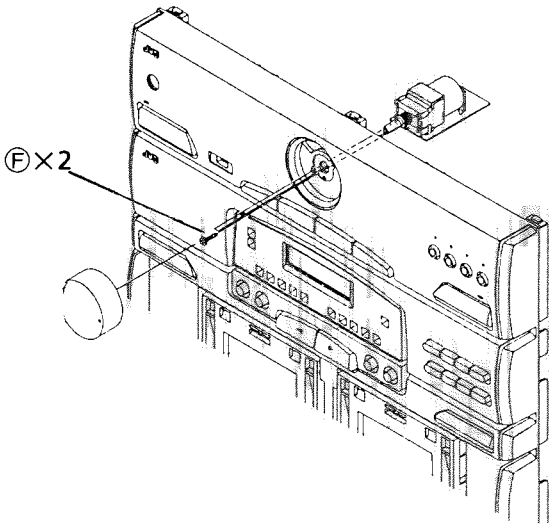

Fig 6 Front panel view

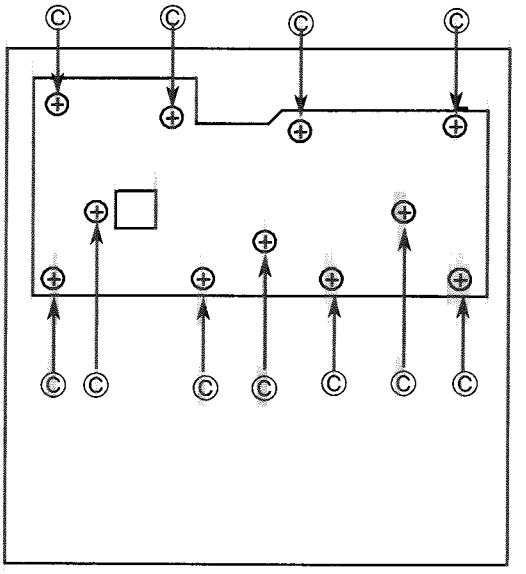

Fig 7 Front panel rear view

(8) Cassette holder removal
1. Open the cassette door.
2. Remove the Cassette holder slide for both side ward.

(9) Cassette mech. ass'y removal
1. Remove the (1)(2)(3) and (8).
2. Remove the 6 screws Ⓖ.
3. Remove the Cassette mech. ass'y.

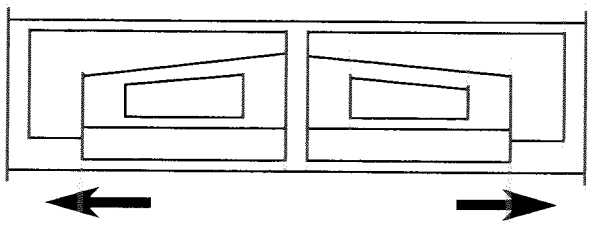

Fig 8 Front panel view

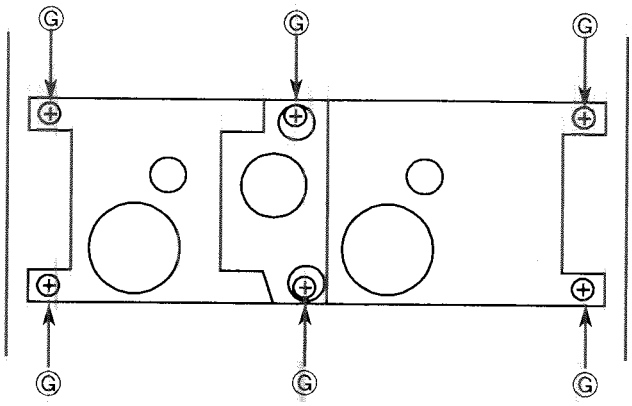

Fig 9 Front panel rear side view

(10) CD changer mech. removal
1. Remove the top cover.
2. Dis connect the CN502.
3. Remove the 2 screws Ⓗ.
4. Pull the changer mech. assembly front side.

(11) FRont panel ass'y removal
1. Remove the (1)(2)(3)(10).
2. Remove the 3screws Ⓓ.
3. Remove the front panel ass'y with the cassette mech. assembly.

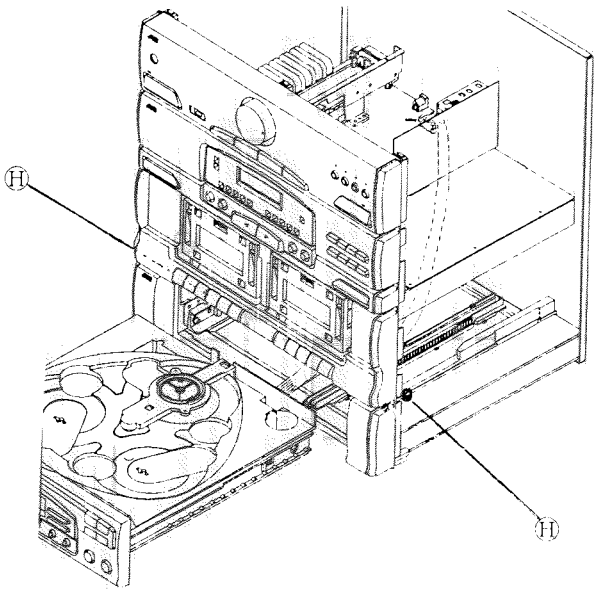

Fig 10

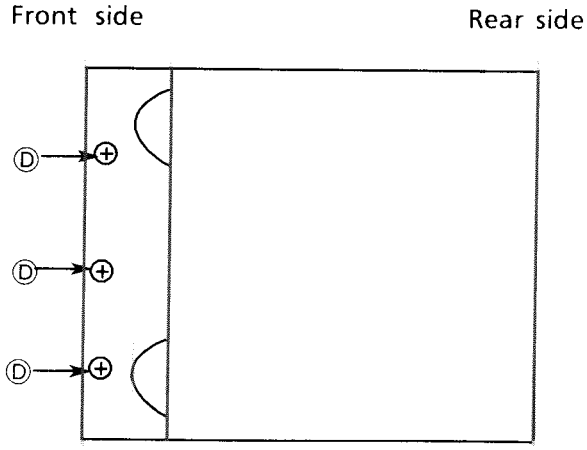

Fig 11 Bottom view

(12) Disc tray removal
1. Remove the CD changer mechanism.
2. Remove the 2 screws Ⓖ and 3screws Ⓒ and remove the CD PCB cover.
3. Press the guide plate .(See the arrow shown in the figure below)
4. Remove the Disc tray Pull up ward.

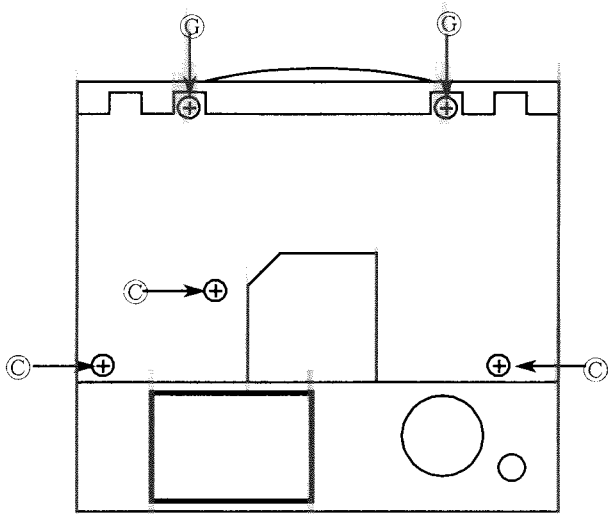

Fig 12 CD changer mech. bottom view

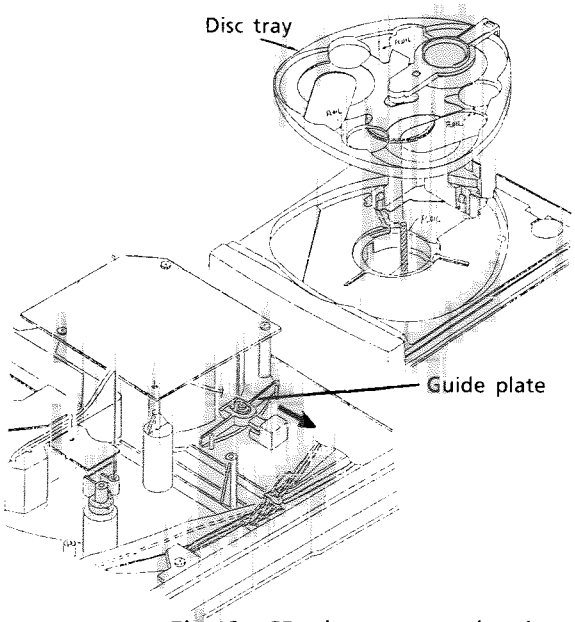

Fig 13 CD changer mech. view

(13) CD changer mechanism's Front panel removal.
1. Remove the (10)(12).
2. Remove the 2 screws Ⓘ and screw Ⓚ,2screws Ⓙ.
3. Remove the CD mech. Front panel ass'y.

(14) CD servo PCB removal.
1. Remove the (10)(12)(13).
2. Remove the 5 screws Ⓖ.
3. Remove the CDservo PCB .

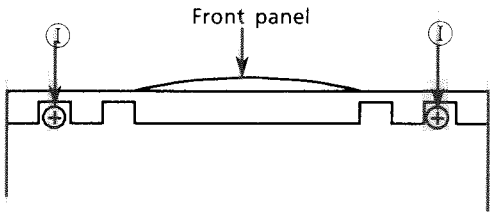

Fig 14 CD changer mech. bottom view

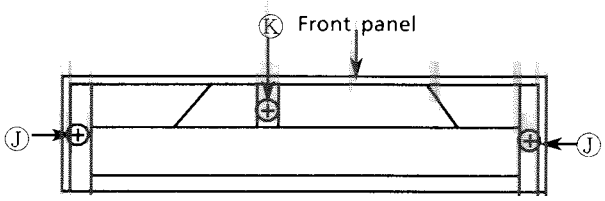

Fig 15 CD changer mech. rear view

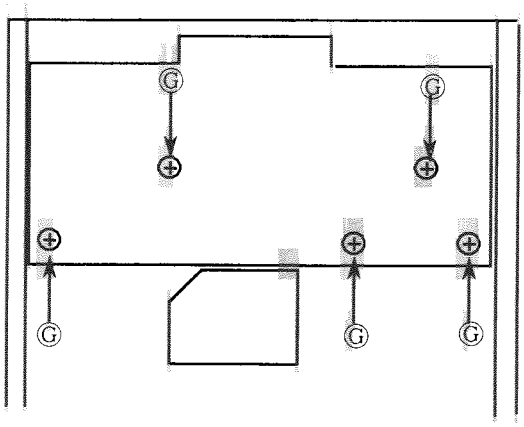

Fig 16 CD changer mech. bottom view

(15) CD traverse mech. ass'y removal

1. Remove the CD Tray ass'y.
2. Press the 4 Cushion holders in the traverse mech. base hole. (See the arrow shown inthe figure below)
3. Remove 4 hooks fixing the CD traverse mech. assembly to remove it.
4. Disconnect the 3 connecters from CD traverse mech. assembly.

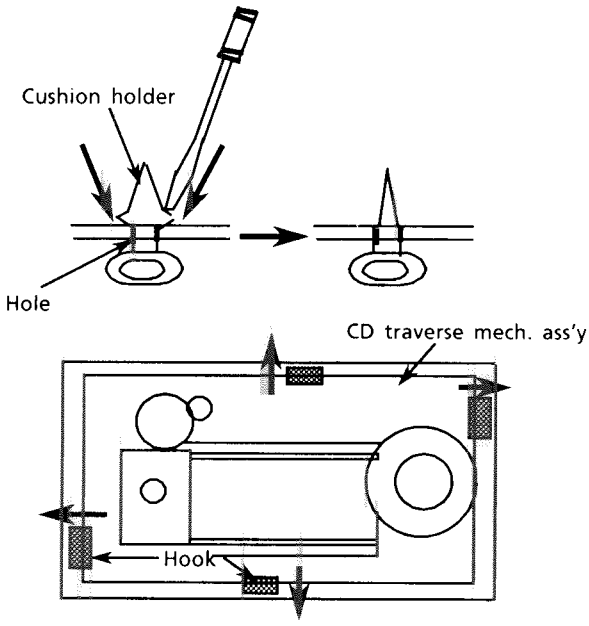

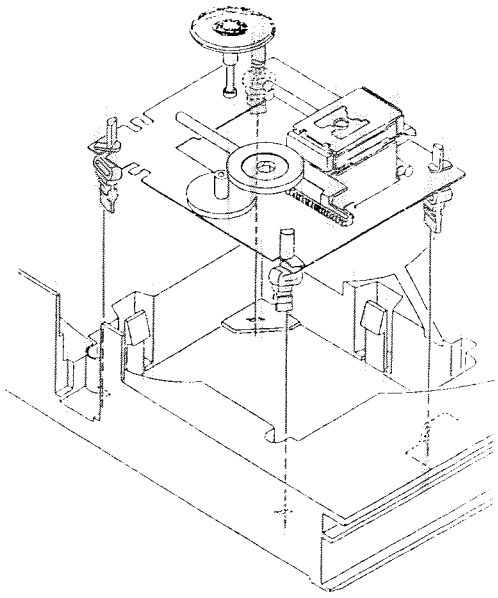

Fig17 CD traverse mech. view

(16) Pick up removal

1. Remove the CD Tray ass'y.
2. Remove the 4 screws Ⓡ holding the pick up shaft.
3. Remove the pick up ass'y and dicconnect the 2 connectors.

(17) Munting plate assembly removal

1. Remove the CD changer mechanism assembly and remove the CD PCB cover.
2. Remove the cassette controller PCB.
3. Remove the 6 screws Ⓒ.
4. Remove the Munting plate assembly

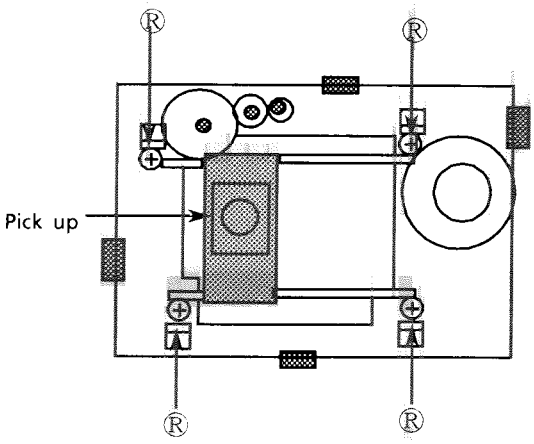

Fig18 CD traverse mech. view

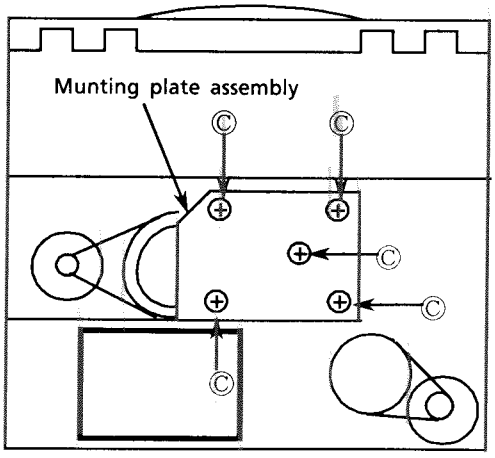

Fig 19 CD changer mech. bottom view

(18) Cam gear and DISC clamp ass'y Removal
1. Remove the CD tray ass'y .
2. Remove the E ring .

(19) Cassette mechanism motor removal
1. Remove the cassette mechanism assembly.
2. Remove the 3 screws Ⓛ.
3. Remove the 3 screws Ⓜ.
4. Remove the motor .

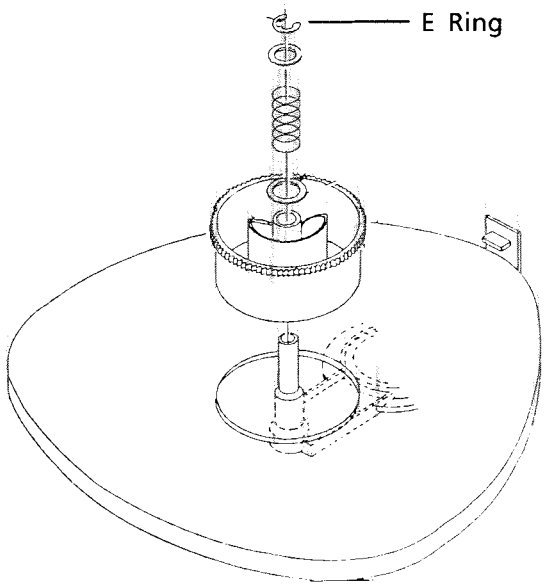

Fig 20 CD tray view

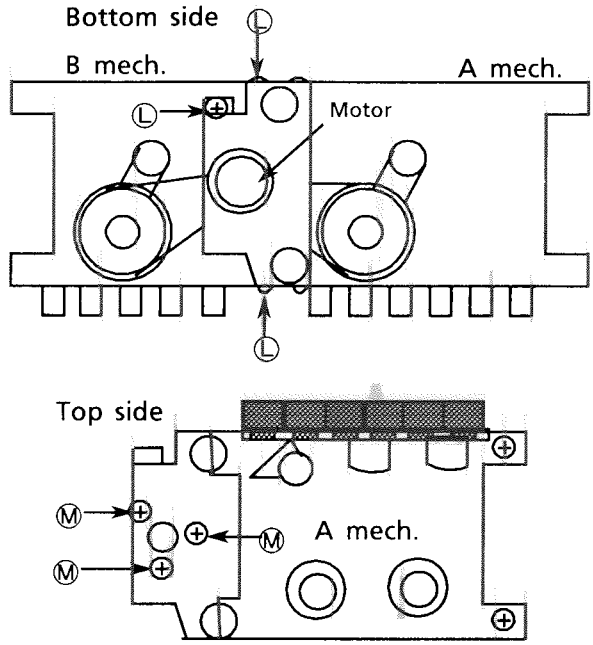

Fig 21 Cassette mech. view

(20) Head assembly removal
1. Remove the cassette mechanism assembly.
2. Remove the 2 screws Ⓝ and remove the knob assembly .
3. Remove the screws Ⓞ, Ⓟ and 2 screws Ⓠ .
4. Remove the Head assembly .

(21) Flywheel removal.
1. Remove the cassette mechanism assembly.
2. Remove the nylon ring .
3. Remove the Flywheel .

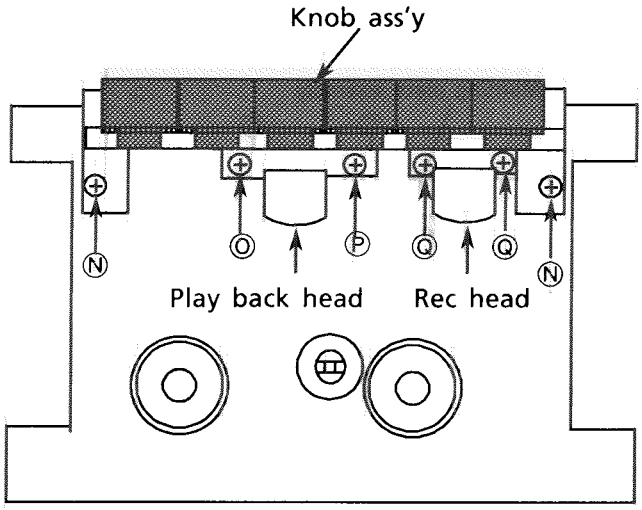

Fig 22 Cassette mech. top view

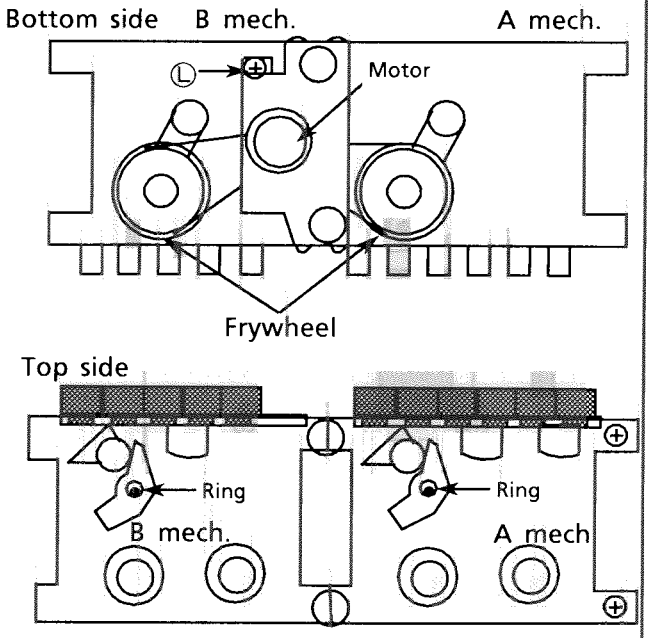

Fig 23 Cassette mech. view

Adjustment Procedures

■ Tuner section

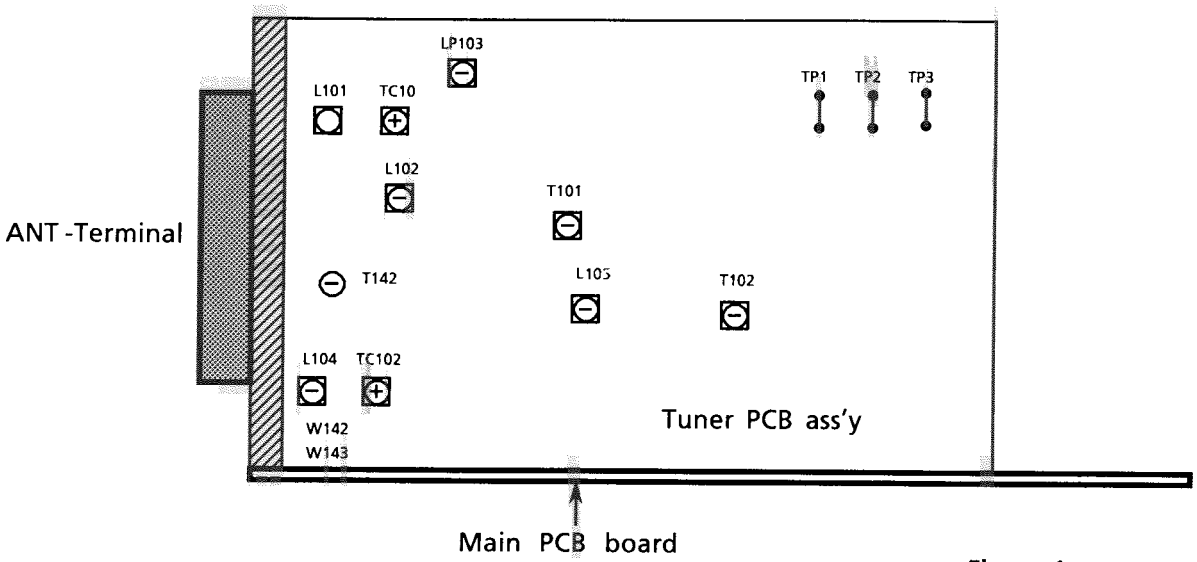

Figure 1

(1) Tuning voltage
Confirm the voltages in the table below at TP-3 and TP2(GND).
If the voltages are not satisfied, replace L105 .

Frequency	530KHz	1720KHz
Tuning Voltage	1.1±0.05	8~9V

(2) IF Check
Adjdust the T102 so that signal output's maximum and distortion's minimum .

■ Deck section

■ Deck adjustment point

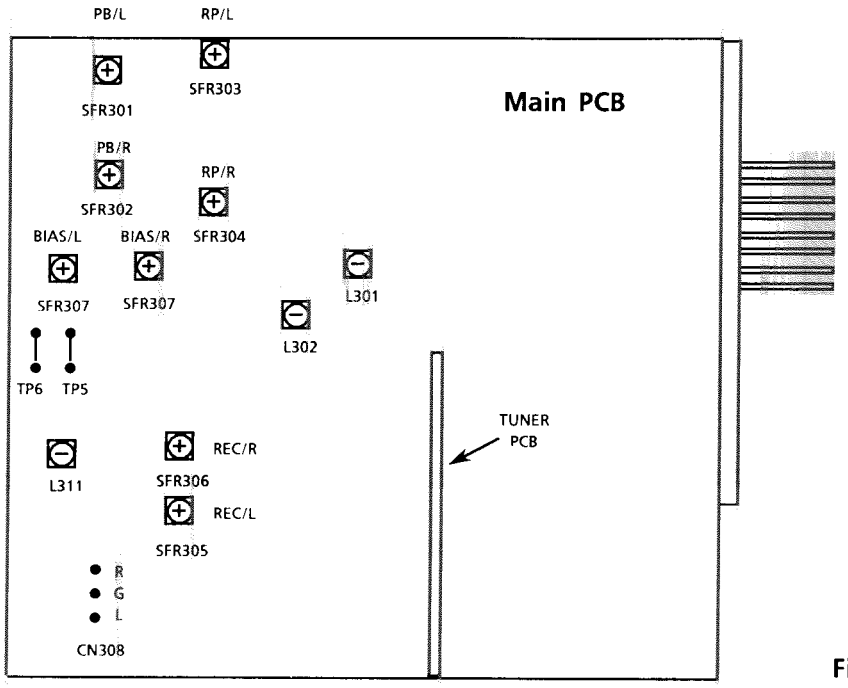

Figure 2

1. Adjustment and repairing the mechanism

Item	Adjustment method	Standard value	Remarks
Head azimuth	Deck A 1. Connect an electronic voltmeter to the CN308 to playback VTT-703L. 2. Adjust screw Ⓐ so that the indication of the voltmeter becomes maximum when PLAY (▶) is pressed. Deck B 3. Adjust screw Ⓑ so that the indication of the voltmeter becomes maximum when PLAY (▶) is pressed. 4. After making the adjustment,apply screw lock to prevent screws Ⓐ and Ⓑ coming loose .	Maximum	1. **Refer to figure 5.** 2. When the specified characteristic cannot be obtained because of head wear, excessive magnetization, etc., replace the head assembly and adjust the head azimuth. Also, perform the electric adjustment. 3. When there is the difference of more than 3 ~ 4 dB between left and right output levels, replace the head assembly to avoid complaints.
Playback torque	1. Measure the torque in the playback mode by the torqu meter.	26 ~ 62 g-cm	When the standard torque cannot be obtained, replace the FR arm assembly or motor.
Fast forward torque	1. Measure the torque in the fast forward mode by the torqu meter.	80 ~ 170 g-cm	When the standard torque cannot be obtained,replace the FR arm assembly or motor.
Wow & flutter	1. Connect the wow & flutter meter to the DOLBY TP(figure 1) and play back VTT-712 . 2. Its reading should be within 0.2% (WRMS).	Less than 0.2%	As a complaint may occur if the wow & flutter fluctuates by 0.1% even though it is allowed in the standard, repairing is required.

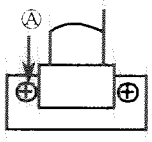

Deck A

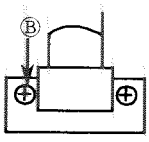

Deck B

Figure 3

2. Electrical Adjustments

(Make the following adjustments after adjusting the head azimuth.)

0dBs=0.775V

	Item	Adjustment Method	Adjustment Location	Standard Value	Remarks
* 1	Standard level (Playback Level)	1. Connect an electronic voltmeter to the CN308. Play back VTT-724 (1 kHz : −4dBs) to adjust the semi - fixed resistors.	**Deck A** L: SFR303 R: SFR304 **Deck B** L: SFR301 R: SFR302	548mV ±1dB	1) The playback level varies when the head is replaced so should be adjusted. Use an electronic voltmeter with an impedance of 100 kΩ or more.
* 2	Recording Bias Frequency	1. Connect a frequency counter to the TP5 and TP6(GND), and perform a recording to adjust bias frequency.	L311	85 kHz ±1kHz	1)Reacording tape Normal TS-8
* 3	Record / Play Bias Trap	1.. Connect an electronic voltmeter to the CN308 to confirm the recorded values. 2. IfInsert the blank tape Deck A and Deck B for recording (Duubbing) 3. Play the A Deeck and adjust L301 and L302 so that minimums output level.	L : L301 R : L302	—	—
* 4	Bias Adjust	1. Connect an electronic voltmeter to the TP1 or TP2, and perform a recording to adjust bias .	TP2 SFR404 TP1 SFR403	5mV	1)Reacording tape Normal TS-8
* 5	Record / Playback Sensitivity	1. Input a 1 kHz (−8.2dBs: 200mV) signal to AUX terminals and record it on the left and right channels . 2. Connect an electronic voltmeter to the CN308 to confirm the recorded values. 3. If the values are not satisfied, adjust the semi-fixed resistors and record the signal again to confirm the recorded values.	L : SFR305 R : SFR306	200mV ±1dB	Adjust with normal tape and make sure that the left / right level difference is 1.0dB or less
* 6	Erase ratio check	1. Record a music source using the Metal tape. 2. Rewind and erase the recorded section. 3. Comfirm nothing can be heard.	—	—	—

■ CD adjustment point

FE BIAS adjustment

1) Remove the CD mechanism and remove the CD PCB cover of the bottom side. (Connected state the CN502)

2) Remove the Disc tray and REmove the adjust volume cover.

3) Connected a DC voltmater to the CN15.

4) Stop mode the CD and adjust VR01 so that DC voltmeter 0V±20mV

SYSTEM BLOCK DIAGRAM – CD

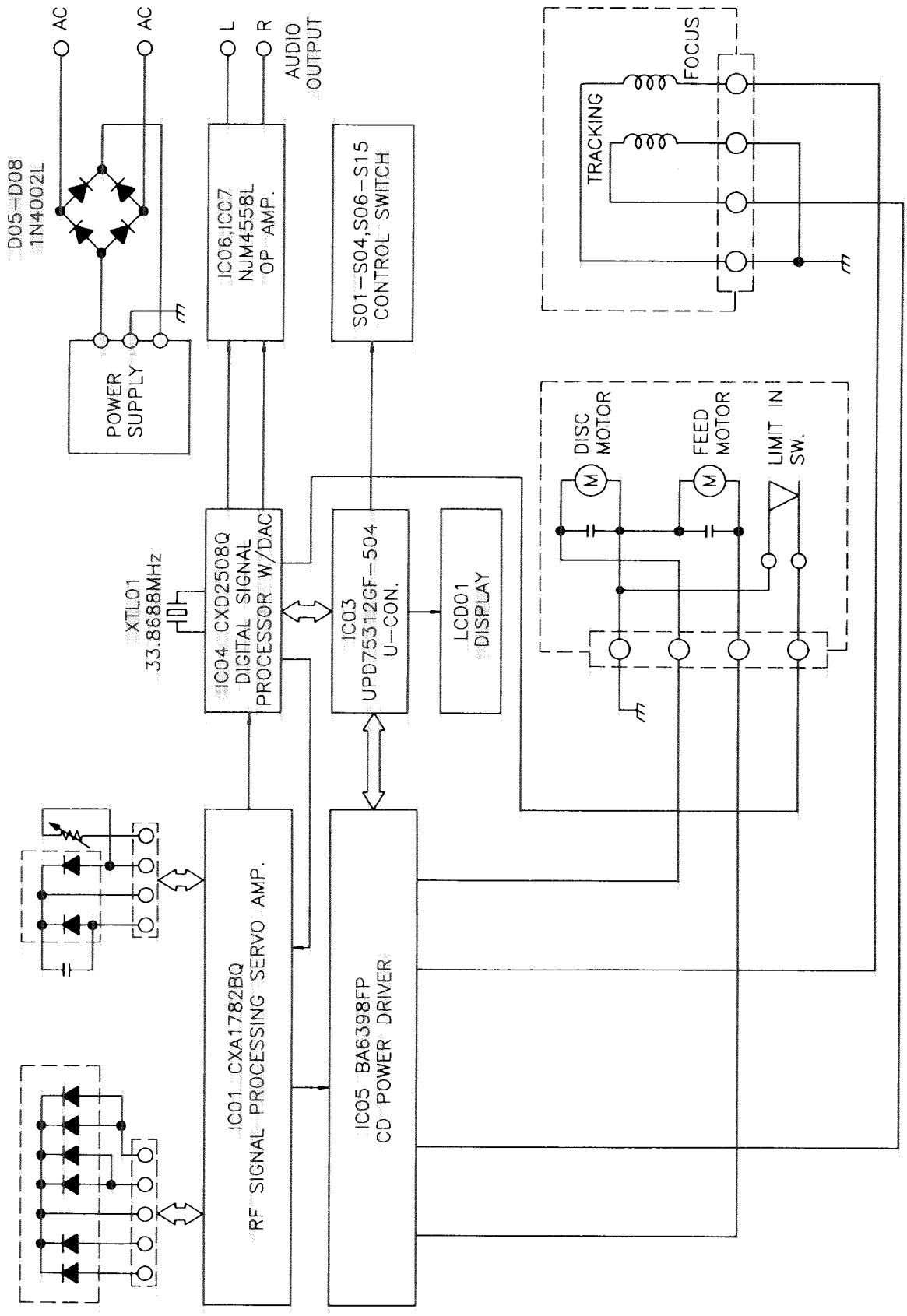

SYSTEM BLOCK DIAGRAM – CASSETTE

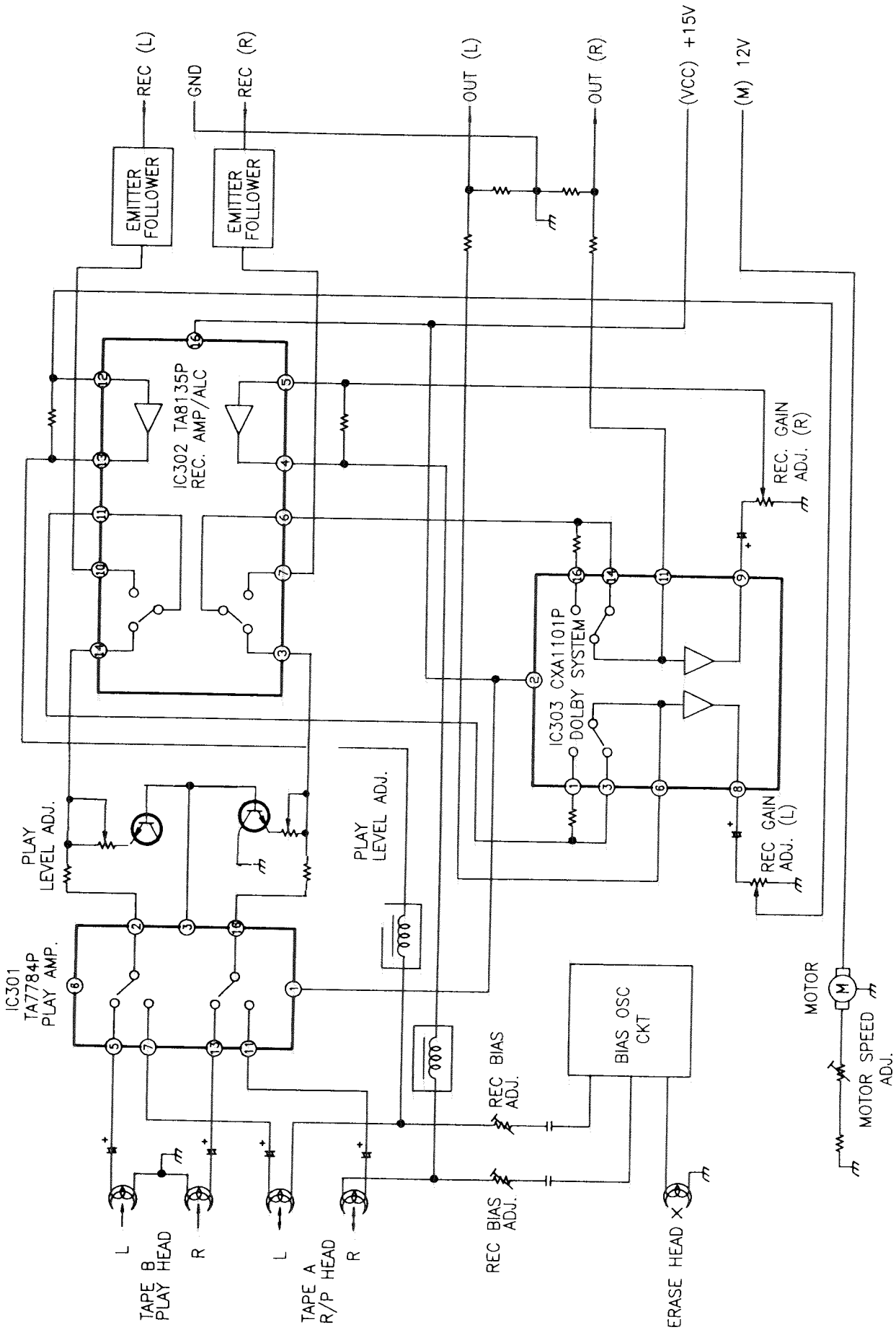

SYSTEM BLOCK DIAGRAM-TUNER&AMPRFIRE

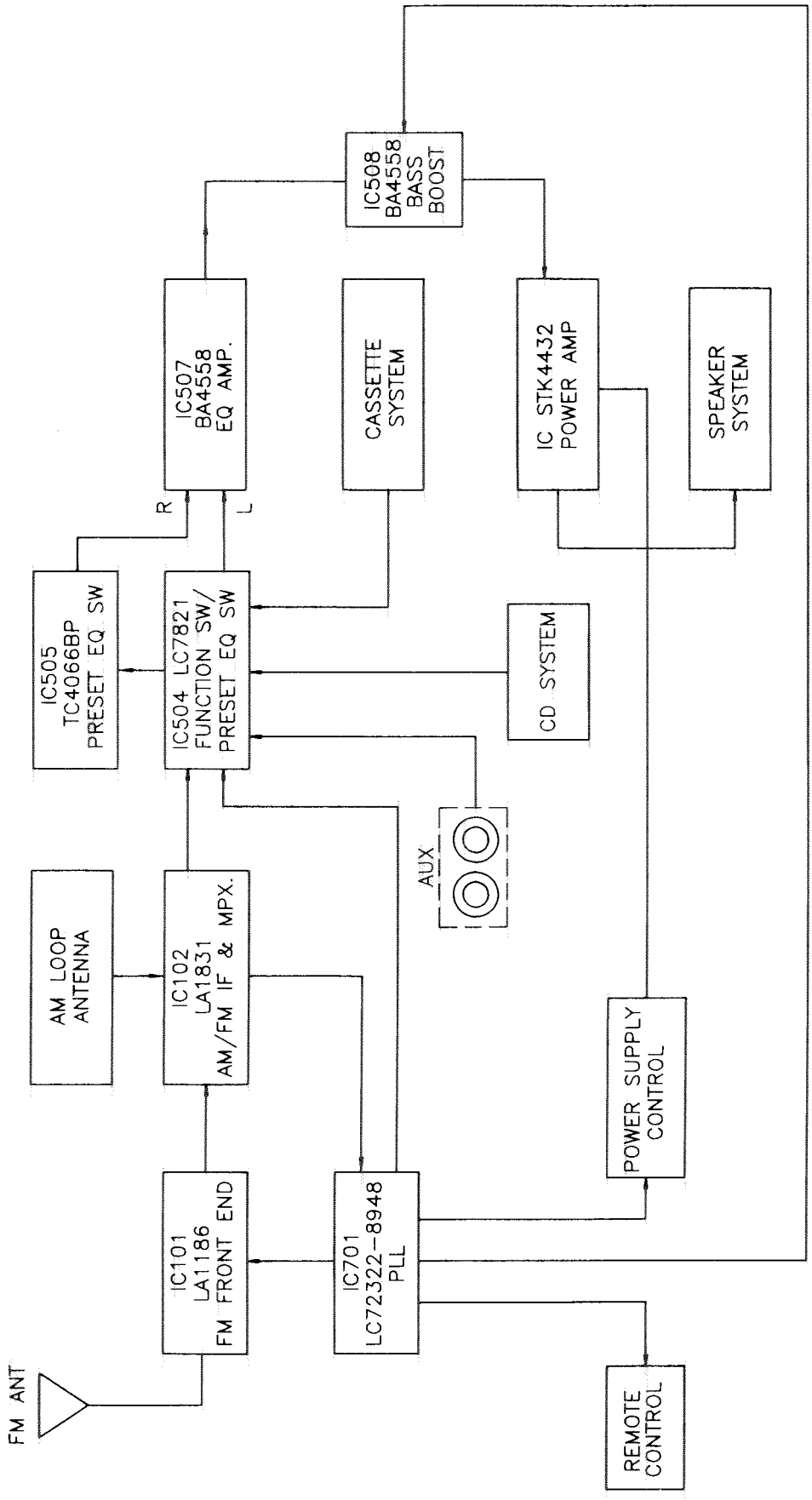

IC AND TRANSISTOR VOLTAGE CHART

(MAIN)

1. IC

IC NO.	PIN NO.																			
	1	2	3	4	5	6	7	8	9	10	11	12	13	14	15	16	17	18	19	20
IC501	15	14.7	0	0	29.5	14	58.6	0	57.5	14.4	29.4	0	0	14.7	15					
IC502	12	0	17.4																	
IC503	11.8	0	17.4																	
IC504	0	0	0.6	0	0.6	0	0	0	0	0.4	0	−11.2	0	0	0	0	0	11.8	11.8	10.9
IC505	0	0	0	0	0	0	0	0	0.6	0	0	0	10.2	12.5						
IC506	10.4	0	6.0																	
IC507	0	0	0	−9.5	0	0	0	10.1												
IC508	0	0	0	−9.5	0	0	0	10.1												

IC NO.	PIN NO.																			
	21	22	23	24	25	26	27	28	29	30										
IC504	0	0	10.9	0	10.2	0.6	0	0.6	0	0										

2. TRANSISTORS

TR NO.	Q501	Q502	Q503	Q504	Q505	Q506	Q507	Q508	Q509	Q510	Q511									
E	16.6	10.4	0	0	13	0	0	0	0	−6.2	−5.9									
C	−12.3	10.4	0	0	17.4	0	0	0	0	6.9	6.5									
B	−12.3	11.1	0.7	0.7	13.6	0	0	0	0	−5.5	−5.1									

(CASSETTE)−RECORD

1. IC

IC NO.	PIN NO.																TR NO.			
	1	2	3	4	5	6	7	8	9	10	11	12	13	14	15	16		Q342	Q343	Q344
IC301	7.8	2.3	2.3	2.2	2.1	2.2	2.1	0	2.2	0.6	2.1	2.2	2.1	2.2	7.7	2.3	E	5.3	0	0
IC302	0	2.8	2.7	2.8	2.9	2.7	2.7	0	0	2.7	2.7	2.8	2.8	2.7	3.8	8.8	C	11.9	5.9	0
IC303	4.9	9.7	4.9	4.9	2.6	5.0	0.4	5.0	5.0	0.4	5.0	0	1.2	4.9	0	4.8	B	5.9	0	2.3

2. TRANSISTORS

TR NO.	Q301	Q302	Q303	Q304	Q305	Q306	Q307	Q308	Q309	Q310	Q311	Q312	Q313	Q314	Q315	Q316	Q317	Q318	Q319	Q320
E	8.8	0	0	0	0	0	0	5.4	0	0	0	0	11.9	0	3.5	3.3	0	0	−19	−19
C	11.8	7.8	0	0	0	0	0.3	11.9	6.0	0	0	0	−23	11.9	6.7	7.0	0	0	0	0
B	9.5	0.1	2.3	2.3	0	0	0	6	0	11.3	−2.3	−2.6	11.9	0	4.0	3.8	0.6	0.6	−14.5	−14.5

TR NO.	Q321	Q322	Q323	Q324	Q325	Q326	Q327	Q329	Q330	Q331	Q332	Q333	Q334	Q335	Q336	Q337	Q338	Q339	Q340	Q341
E	−13	−13	0	0	0.1	0.1	7.2	11.9	0	0.8	1.0	0	0	0	0	5.3	0	0	0	0
C	0	0	−26	6.4	7.0	7.0	7.0	11.2	11.9	3.6	4.0	0	0	0	0	11.9	5.9	0	0	6.4
B	−15.6	−15.6	0	0	0.4	0.4	6.4	11.9	0	1.4	1.6	5.3	5.3	0	0	5.9	0	0.6	0.6	0.1

IC AND TRANSISTOR VOLTAGE CHART

(TUNER)

1. IC

	IC NO.	PIN NO.																			
		1	2	3	4	5	6	7	8	9	10	11	12	13	14	15	16	17	18	19	20
	IC101	0.9	1.6	4.7	0	0	4.7	2.8	4.4	4.7											
AM	IC102	2.0	5.3	2.0	2.0	0	5.2	5.3	4.5	5.3	0	1.7	0.6	1	0.9	0.9	2.0	2.4	1.1	2.0	1.1
FM	IC102	2.0	5.2	2.1	2.0	0	5.2	5.2	3.0	5.2	0	4.1	4.1	4.1	0.9	0.9	2.0	2.3	2.2	1.5	0.2

2. TRANSISTORS

TR NO.	Q101	Q102	Q102	Q103	Q105	Q107	Q108	Q109	Q109		Q106
E	0	0	0	4.0	5.7	0.6	0	0	0	S	1.1
C	4.2	0	2.8	0	5.6	1.4	1.4	0.1	4.1	D	5.7
B	0.8	0	0.7	5.6	1.5	1.1	0.6	0.6	0	G	0
		AM	FM					AM	FM		

	IC NO.	PIN NO.			
		21	22	23	24
AM	IC102	2.0	2.0	5.3	3.9
FM	IC102	2.3	2.3	5.2	3.8

(FRONT)

1. IC

IC NO.	PIN NO.																			
	1	2	3	4	5	6	7	8	9	10	11	12	13	14	15	16	17	18	19	20
IC701	2.9	0	5.3	5.3	4.8	0	0	5.8	2.1	1.1	0	0	0	0	0	0	0	0	0	5.3
IC702	0	0.6	0.8	4.4	0	0	11.8	11.8	0.8	0.6										
IC703	10.4	10.4	10.4	10.4	0	10.4	0	0	11.9											
IC704	10.4	10.4	10.4	10.4	0	10.4	0	0	11.9											

IC NO.	PIN NO.																			
	21	22	23	24	25	26	27	28	29	30	31	32	33	34	35	36	37	38	39	40
IC701	0	0	5.3	5.3	5.3	5.3	5.3	5.3	5.3	5.3	5.3	0	0	0	0	2.6	2.6	2.6	2.6	2.6

IC NO.	PIN NO.																			
	41	42	43	44	45	46	47	48	49	50	51	52	53	54	55	56	57	58	59	60
IC701	2.6	2.6	2.6	2.6	2.6	2.6	2.6	2.6	2.6	2.6	2.6	2.6	2.6	2.6	2.6	2.6	2.6	2.6	2.6	2.6

IC NO.	PIN NO.																			
	61	62	63	64	65	66	67	68	69	70	71	72	73	74	75	76	77	78	79	80
IC701	2.6	2.6	2.6	2.6	2.6	5.3	5.0	5.3	5.3	0	0	5.9	5.3	0	0	0	2.0	1.0	0	2.3

2. TRANSISTORS

TR NO.	Q702	Q703	Q704	Q705
E	0	0	0	0
C	10.5	10.5	10.5	0
B	0	0	0	0.8

IC AND TRANSISTOR VOLTAGE CHART

(CASSETTE) –PLAYBACK

1. IC

IC NO.	PIN NO.															
	1	2	3	4	5	6	7	8	9	10	11	12	13	14	15	16
IC301	7.9	2.3	0	2.3	2.2	2.2	2.1	0	2.2	0	2.1	2.2	2.1	2.3	0.3	2.3
IC302	5.7	2.7	2.7	2.8	2.7	2.7	2.7	0	0	2.7	2.7	2.7	2.8	2.7	3.9	8.6
IC303	4.9	9.7	4.9	4.9	2.6	5.0	0.3	5.0	5.0	0.3	5.0	7.7	1.2	4.9	0	4.9

TR NO.	Q342	Q343	Q344
E	5.3	0	0
C	12	5.9	2.4
B	5.9	0	0

2. TRANSISTORS

TR NO.	Q301	Q302	Q303	Q304	Q305	Q306	Q307	Q308	Q309	Q310	Q311	Q312	Q313	Q314	Q315	Q316	Q317	Q318	Q319	Q320
E	8.8	0	0	0	0	0	0	5.4	0	0	0	0	11.9	0	3.5	3.3	0	0	0	0
C	11.8	0	0	0	0	0	0	12	6.0	4.0	0	0	11.9	0	6.7	7.0	0	0	0	0
B	9.5	3.6	0	0	2.4	2.5	2.4	6	0	0	0.7	11.7	11.2	12	4.0	3.8	0	0	0.6	0.6

TR NO.	Q321	Q322	Q323	Q324	Q325	Q326	Q327	Q329	Q330	Q331	Q332	Q333	Q334	Q335	Q336	Q337	Q338	Q339	Q340	Q341
E	0	0	11.9	0	0	0	0	0	0	0	0	0	0	0	0	5.3	0	0	0	0
C	0	0	11.9	0	0.1	0.1	0.1	0	0	0	0	0	0	0	0	12	6.0	0	0	0
B	0.6	0.6	11.2	0.6	0.1	0.1	0	0	0	0	0	5.3	5.3	0	0	6.0	0	0	0	0

(CD)

1. IC

IC NO.	PIN NO.																			
	1	2	3	4	5	6	7	8	9	10	11	12	13	14	15	16	17	18	19	20
IC01	2.6	2.6	2.6	2.5	2.5	2.5	2.5	3.0	2.5	2.4	0.8	2.5	2.5	2.5	2.5	2.5	1.2	5.0	5.0	5.0
IC03	2.5	2.5	2.5	2.5	2.5	2.5	2.5	2.5	2.5	2.5	2.5	2.5	5.0	5.0	5.0	5.0	0	5.1	5.1	5.1
IC04	0	2.5	5.0	0	5.1	5.1	0	5.1	0	5.1	5.1	0	0	0	0	5.0	5.0	5.0	5.0	0.2
IC05	4.1	4.1	2.5	2.5	7.0	2.5	8.5	0	2.5	2.5	4.1	4.1	0	2.5	2.5	2.5	4.2	4.1	2.5	2.5
IC06	0	1.3	1.3	–10.6	0	0	0	11.5												
IC07	0	1.3	1.3	–10.6	0	0	0	11.5												

IC NO.	PIN NO.																			
	21	22	23	24	25	26	27	28	29	30	31	32	33	34	35	36	37	38	39	40
IC01	0	5	0	0	0.1	2.2	4.3	3.1	1.3	2.5	0.9	3.5	0.8	0	2.2	2.2	2.4	2.1	2.1	3.4
IC03	2.5	2.5	2.5	2.5	5.1	5.1	3.4	1.7	5.0	5.0	5.0	0.1	0	0.2	0.8	0.2	8.8	0	5.0	0.2
IC04	0.2	5.0	0.1	0	2.5	0.1	0	0	2.6	2.6	2.5	5.0	0	2.6	5.0	2.5	0.8	2.5	2.5	5.0
IC05	8.5	8.5	2.5	2.5	2.5	4.1	4.1	0												

IC NO.	PIN NO.																			
	41	42	43	44	45	46	47	48	49	50	51	52	53	54	55	56	57	58	59	60
IC01	0	2.5	2.5	2.5	1.9	2.5	2.5	2.5												
IC03	0	0	5.0	0	0.1	0	5.1	0	0	5.0	0	0	0	5.1	5.1	0	4.4	2.4	2.6	5.0
IC04	2.5	2.5	2.5	0	2.5	2.3	2.4	4.8	5.0	2.3	0	2.5	0	5.0	0	4.3	3.6	0	2.6	2.3

IC AND TRANSISTOR VOLTAGE CHART

1. IC

IC NO.	PIN NO.																			
	61	62	63	64	65	66	67	68	69	70	71	72	73	74	75	76	77	78	79	80
IC03	5.0	5.0	5.0	5.1	5.1	5.1	5.1	5.1	2.5	2.5	2.5	2.5	2.5	2.5	2.5	2.5	2.5	2.5	2.5	2.5
IC04	2.4	0	0	2.5	4.7	4.7	0	5.0	2.5	2.5	5.0	5.0	2.5	2.5	0	0	2.5	2.5	0	0

2. TRANSISTORS

TR NO.	Q01	Q02	Q03	Q04	Q05	Q06	Q07	Q09	Q10	Q11	Q12	Q13	Q14	Q15	Q16					
E	1.4	5.0	8.5	8.8	−9.8	8.8	5.0	5.0	8.5	5.0	0	0	5.1	0	0					
C	1.4	1.4	8.5	8.8	8.8	8.8	5.0	5.0	11.5	11.5	5.6	0	5.1	0	0					
B	0.8	5.1	8.5	8.8	−10.6	8.8	0	0	9.1	5.6	0	0.6	4.5	0.7	0.7					

Schematic Diagram

Key & System Control Section

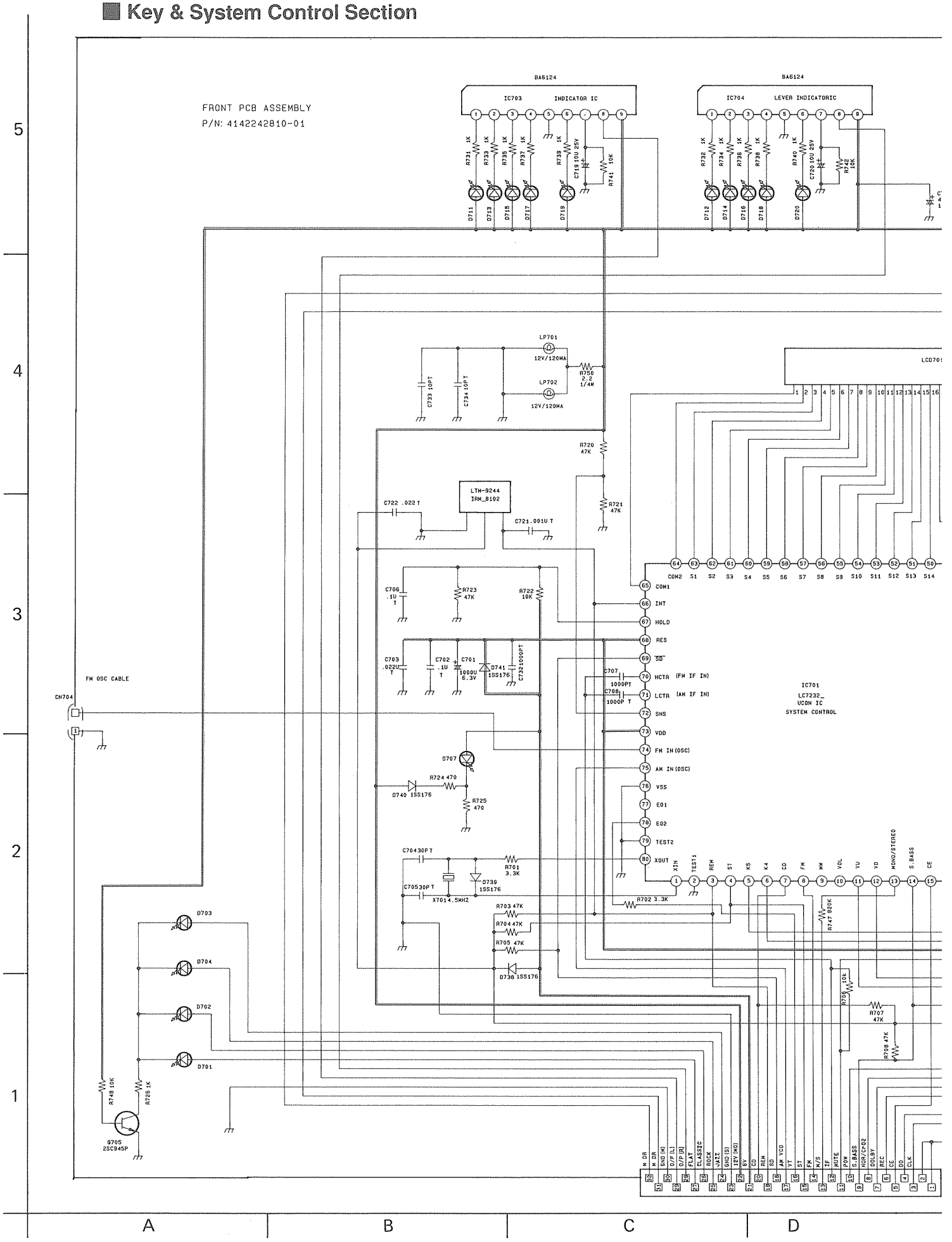

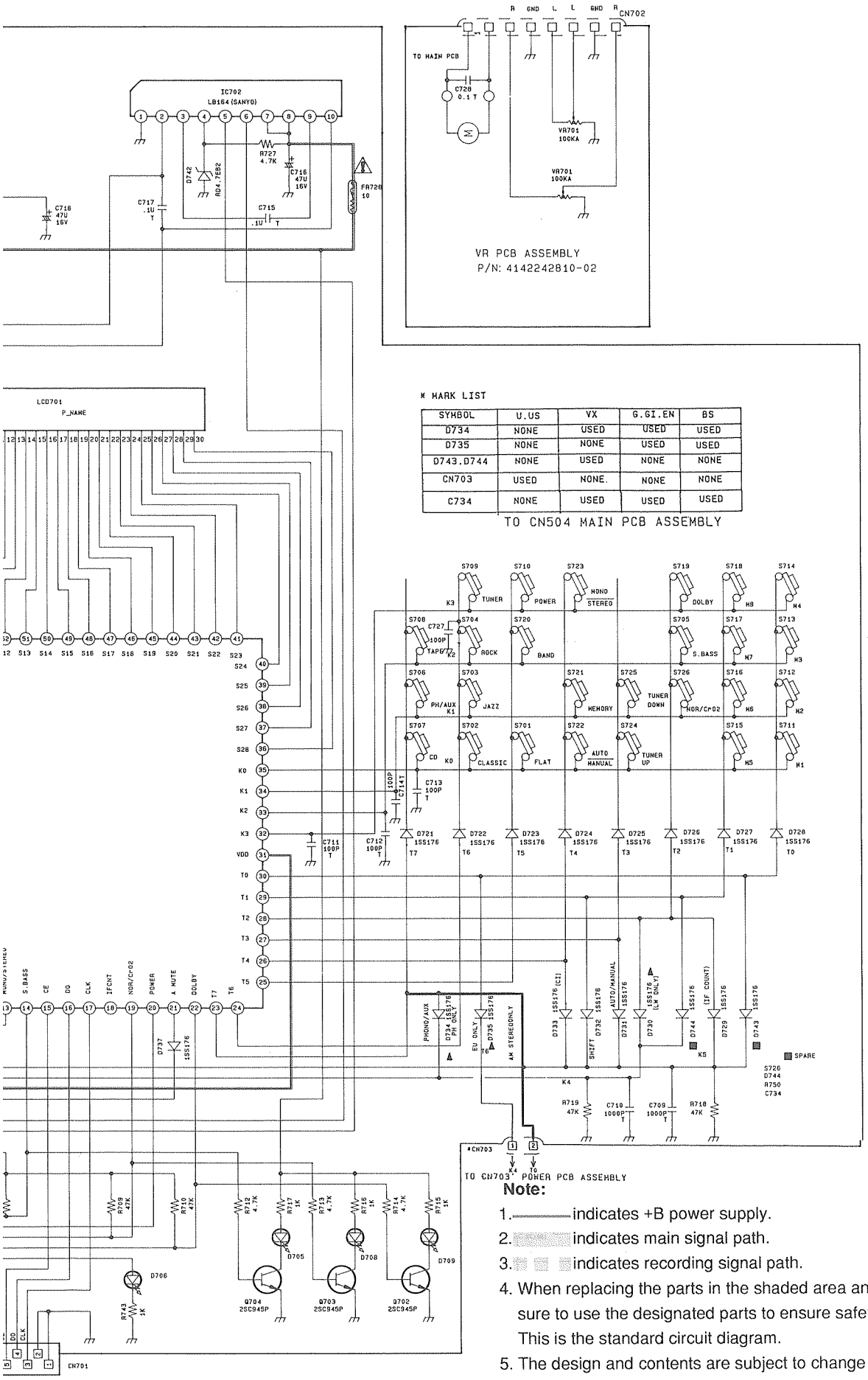

* MARK LIST

SYMBOL	U.US	VX	G.GI.EN	BS
D734	NONE	USED	USED	USED
D735	NONE	NONE	USED	USED
D743.D744	NONE	USED	NONE	NONE
CN703	USED	NONE.	NONE	NONE
C734	NONE	USED	USED	USED

Note:

1. ——— indicates +B power supply.
2. ▒▒▒ indicates main signal path.
3. ▒ ▒ ▒ indicates recording signal path.
4. When replacing the parts in the shaded area and those marked with ▒,be sure to use the designated parts to ensure safety.
   This is the standard circuit diagram.
5. The design and contents are subject to change without notice.

CD Servo Section

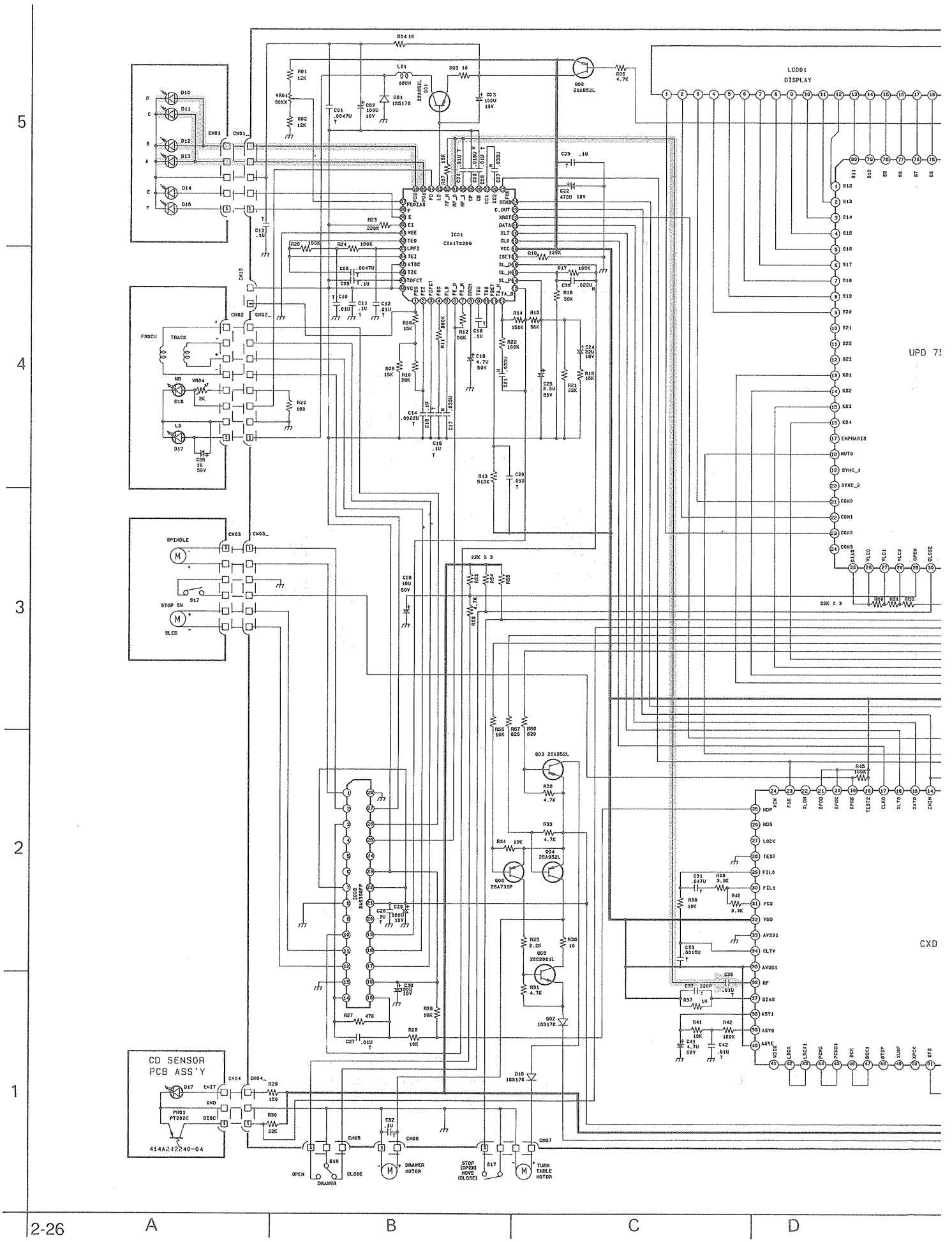

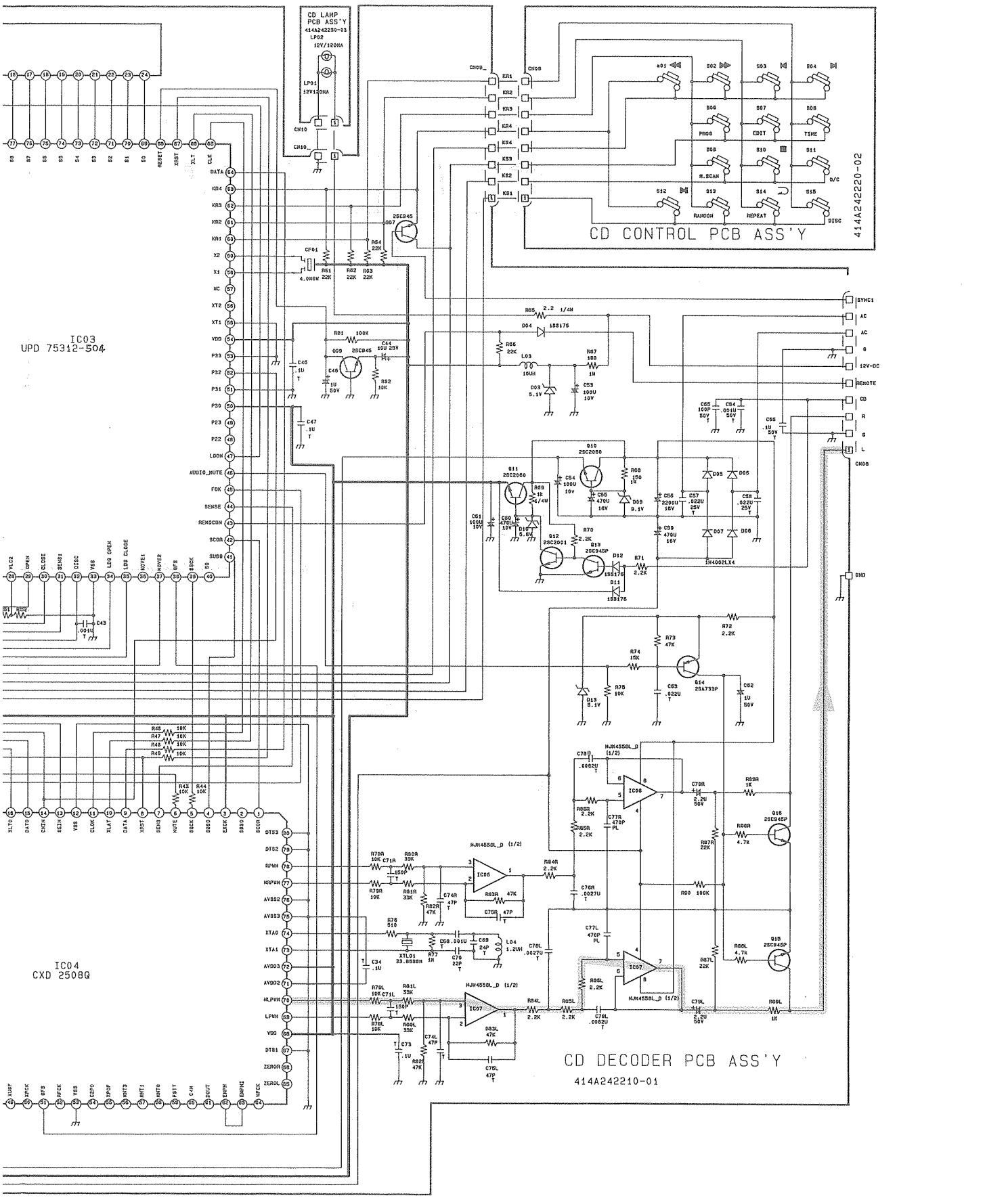
CD LAMP PCB ASS'Y
414A242230-03
CD CONTROL PCB ASS'Y
414A242220-02
IC03
UPD 75312-504
IC04
CXD 2508Q
CD DECODER PCB ASS'Y
414A242210-01
E
F
G
H

Cassette Amplifier Section

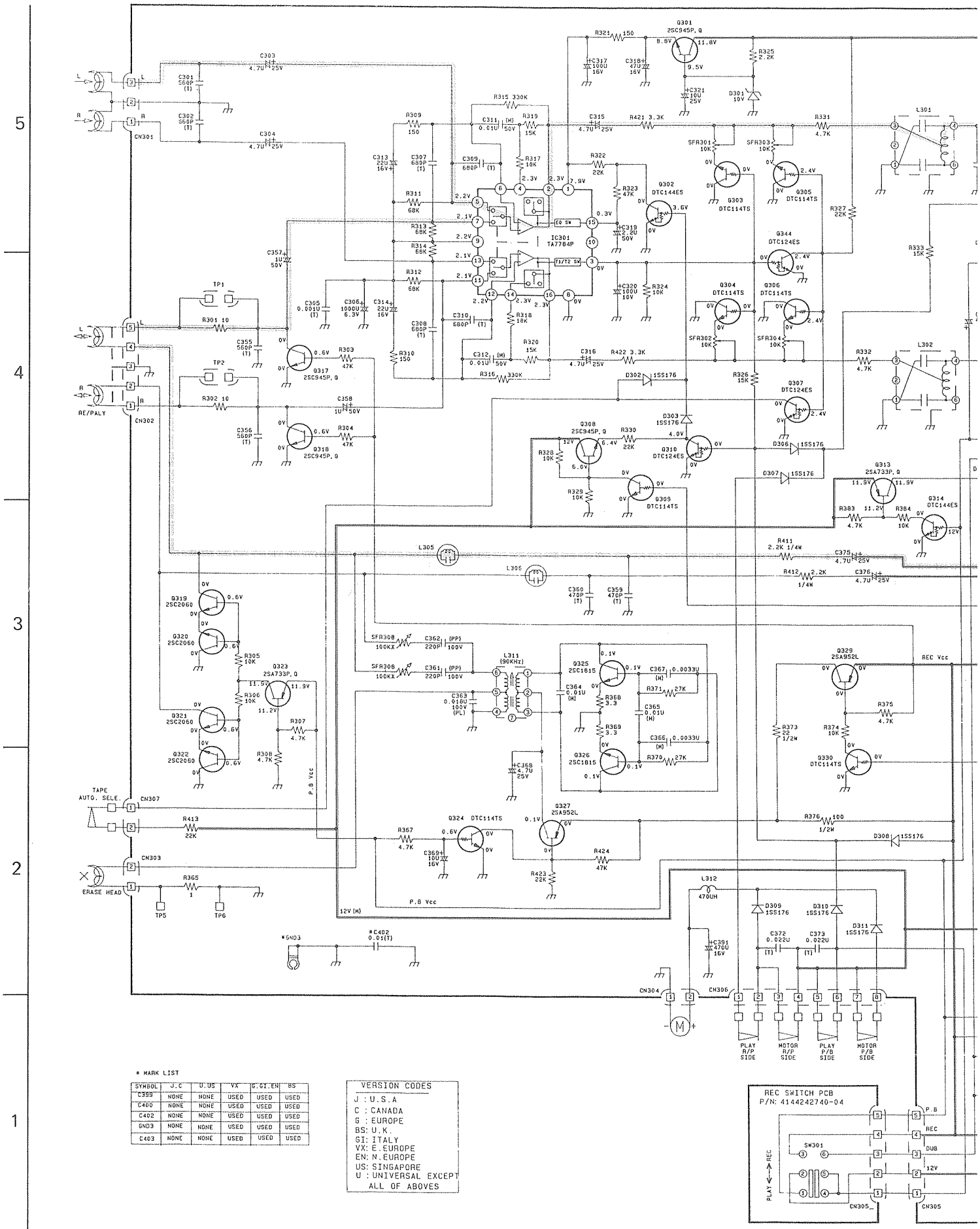

* MARK LIST

SYMBOL	J.C	U.US	VX	G.GI.EN	BS
C399	NONE	NONE	USED	USED	USED
C400	NONE	NONE	USED	USED	USED
C402	NONE	NONE	USED	USED	USED
GND3	NONE	NONE	USED	USED	USED
C403	NONE	NONE	USED	USED	USED

VERSION CODES

J : U.S.A
C : CANADA
G : EUROPE
BS: U.K.
GI: ITALY
VX: E.EUROPE
EN: N.EUROPE
US: SINGAPORE
U : UNIVERSAL EXCEPT ALL OF ABOVES

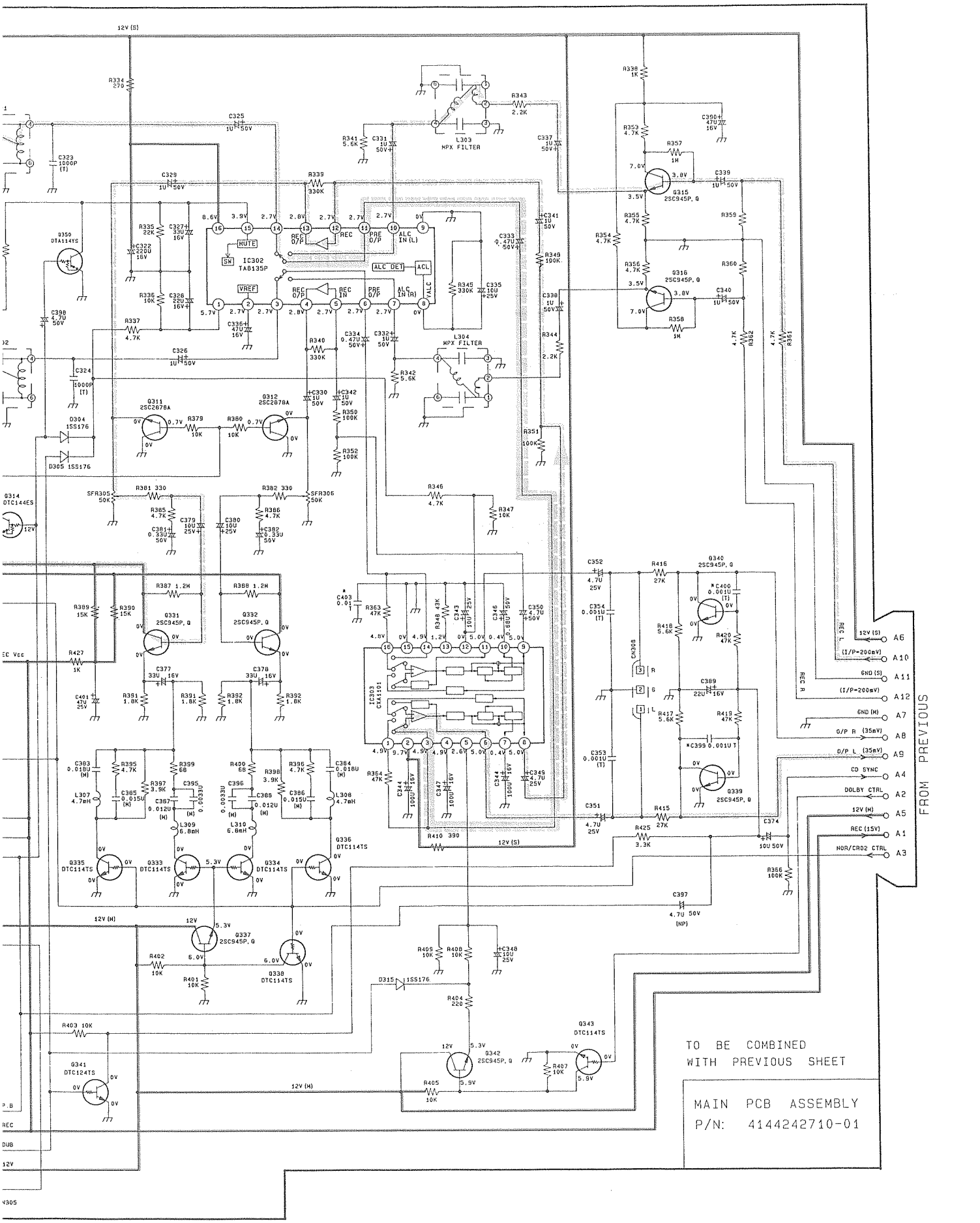
TO BE COMBINED
WITH PREVIOUS SHEET
MAIN PCB ASSEMBLY
P/N: 4144242710-01
FROM PREVIOUS
12V (S)
12V (H)
12V (M)
REC L
REC R
A6
A10
A11
A12
A7
A8
A9
A4
A2
A5
A1
A3
12V (S)
(I/P=200mV)
GND (S)
(I/P=200mV)
GND (H)
O/P R (35mV)
O/P L (35mV)
CD SYNC
DOLBY CTRL
12V (H)
REC (15V)
NOR/CRO2 CTRL
L303
MPX FILTER
L304
MPX FILTER
IC302
TA8135P
IC303
CXA1101
CN308
Q315
2SC945P, Q
Q316
2SC945P, Q
Q340
2SC945P, Q
Q339
2SC945P, Q
Q311
2SC2878A
Q312
2SC2878A
Q331
2SC945P, Q
Q332
2SC945P, Q
Q335
DTC114TS
Q333
DTC114TS
Q334
DTC114TS
Q336
DTC114TS
Q337
2SC945P, Q
Q338
DTC114TS
Q341
DTC124TS
Q342
2SC945P, Q
Q343
DTC114TS
Q350
DTA114YS
Q314
DTC144ES
D304
1SS176
D305 1SS176
D315 1SS176
SFR305
SFR306
REC
DUB
12V
N305

Souse Select & Amplifier Section

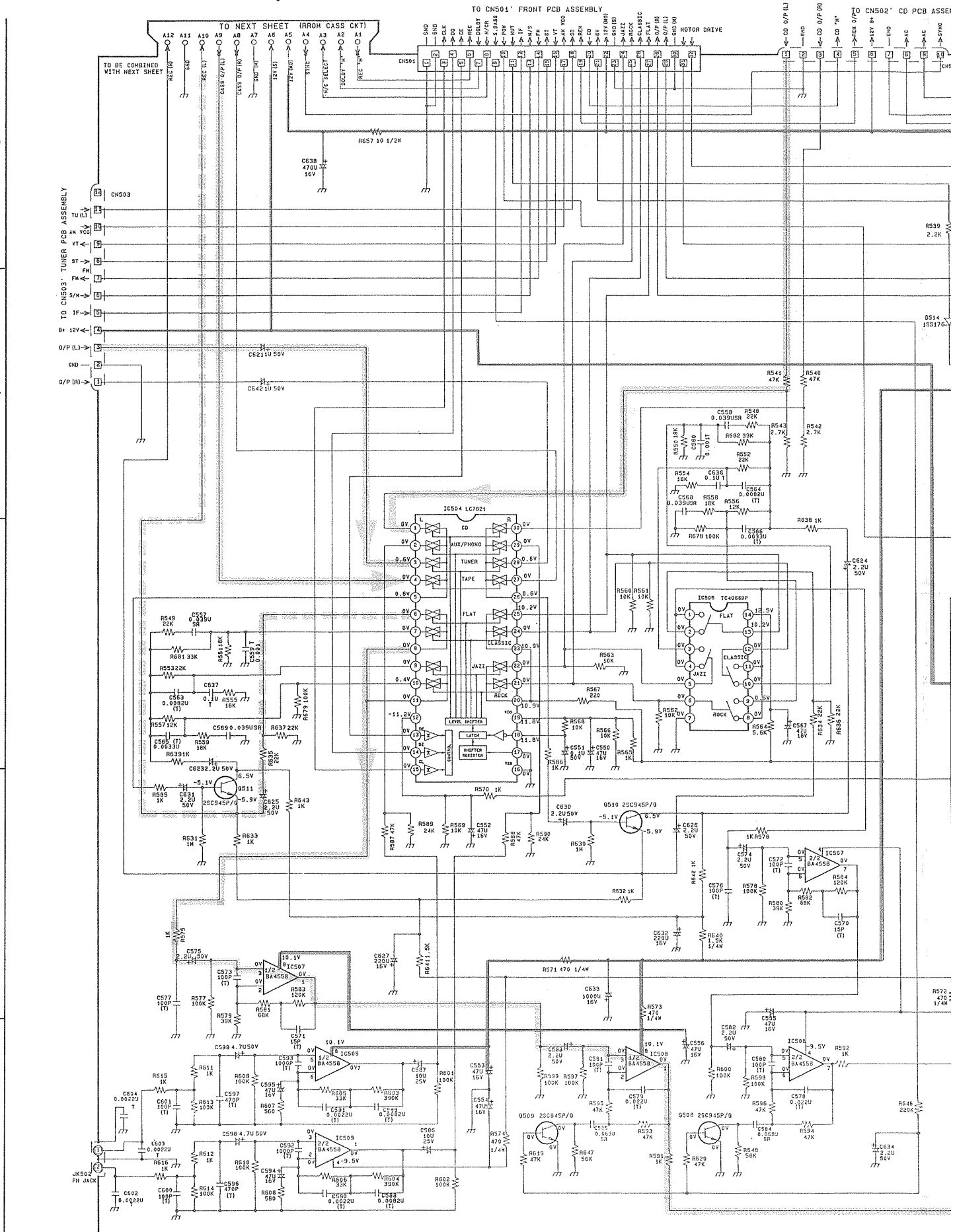

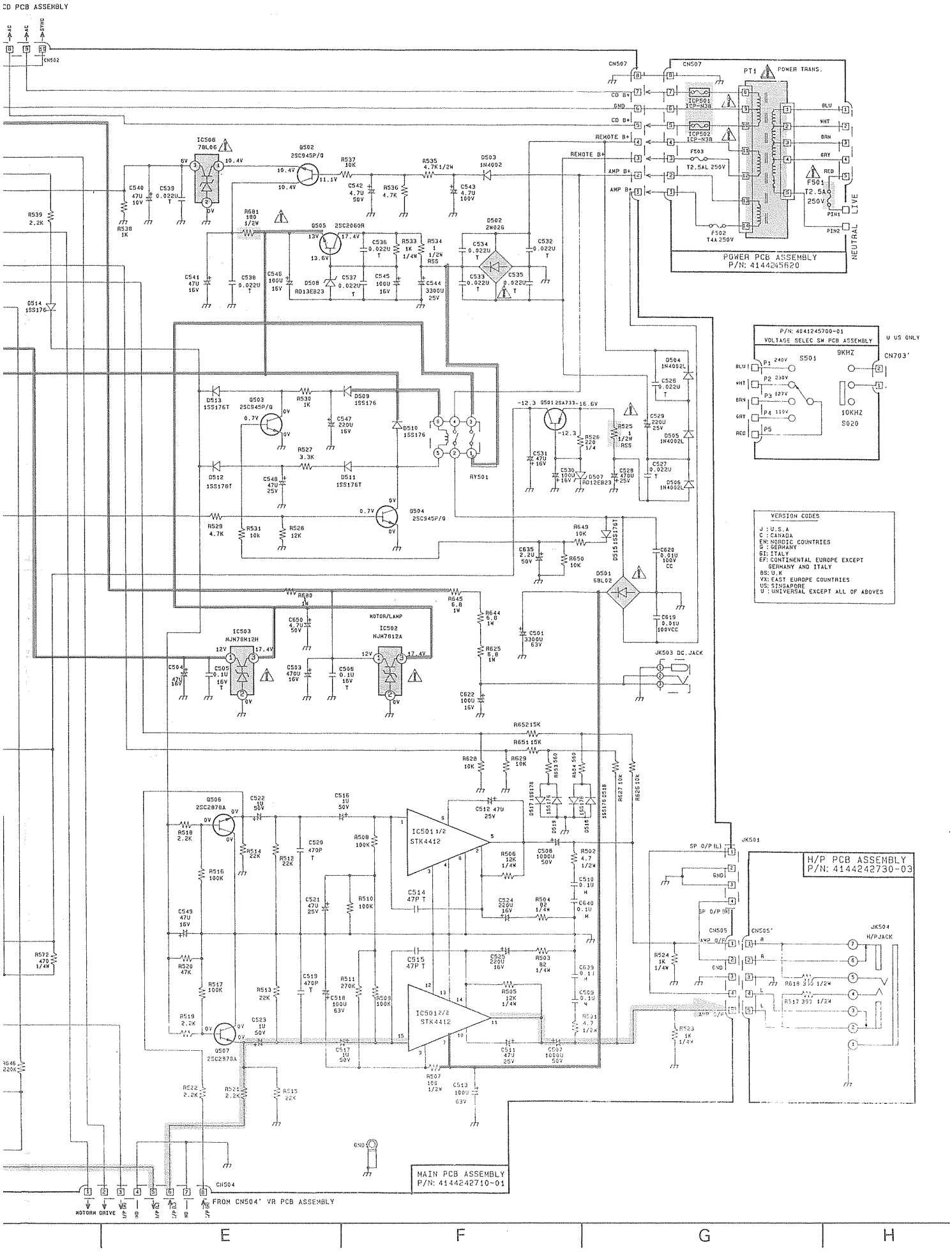
CD PCB ASSEMBLY
CN502
CN507
PT1
POWER TRANS.
CD B+
GND
REMOTE B+
AMP B+
F503
T2.5AL 250V
F501
T2.5AL 250V
F502
T4A 250V
BLU
WHT
BRN
GRY
RED
PIN1
PIN2
LIVE
NEUTRAL
POWER PCB ASSEMBLY
P/N: 4144245620
IC506
78L06
Q502
2SC945P/Q
Q505
2SC2060R
D502
2W026
RY501
Q503
2SC945P/Q
Q504
2SC945P/Q
Q501
2SA733
D501
6BL02
IC503
NJM78M12H
MOTOR/LAMP
IC502
NJM7812A
JK503 DC JACK
P/N: 4041245700-01
VOLTAGE SELEC SW PCB ASSEMBLY
U US ONLY
S501
9KHZ
CN703'
10KHZ
S020
P1 240V
P2 230V
P3 127V
P4 110V
P5
VERSION CODES
J : U.S.A
C : CANADA
EN: NORDIC COUNTRIES
G : GERMANY
GI: ITALY
EF: CONTINENTAL EUROPE EXCEPT GERMANY AND ITALY
BS: U.K
VX: EAST EUROPE COUNTRIES
US: SINGAPORE
U : UNIVERSAL EXCEPT ALL OF ABOVES
IC501 1/2
STK4412
IC501 2/2
STK4412
Q506
2SC2878A
Q507
2SC2878A
JK501
SP O/P (L)
SP O/P (R)
CN505
CN505'
AMP O/P
JK504
H/P JACK
H/P PCB ASSEMBLY
P/N: 4144242730-03
MAIN PCB ASSEMBLY
P/N: 4144242710-01
CN504
FROM CN504' VR PCB ASSEMBLY
MOTOR DRIVE
E
F
G
H

Tuner Section

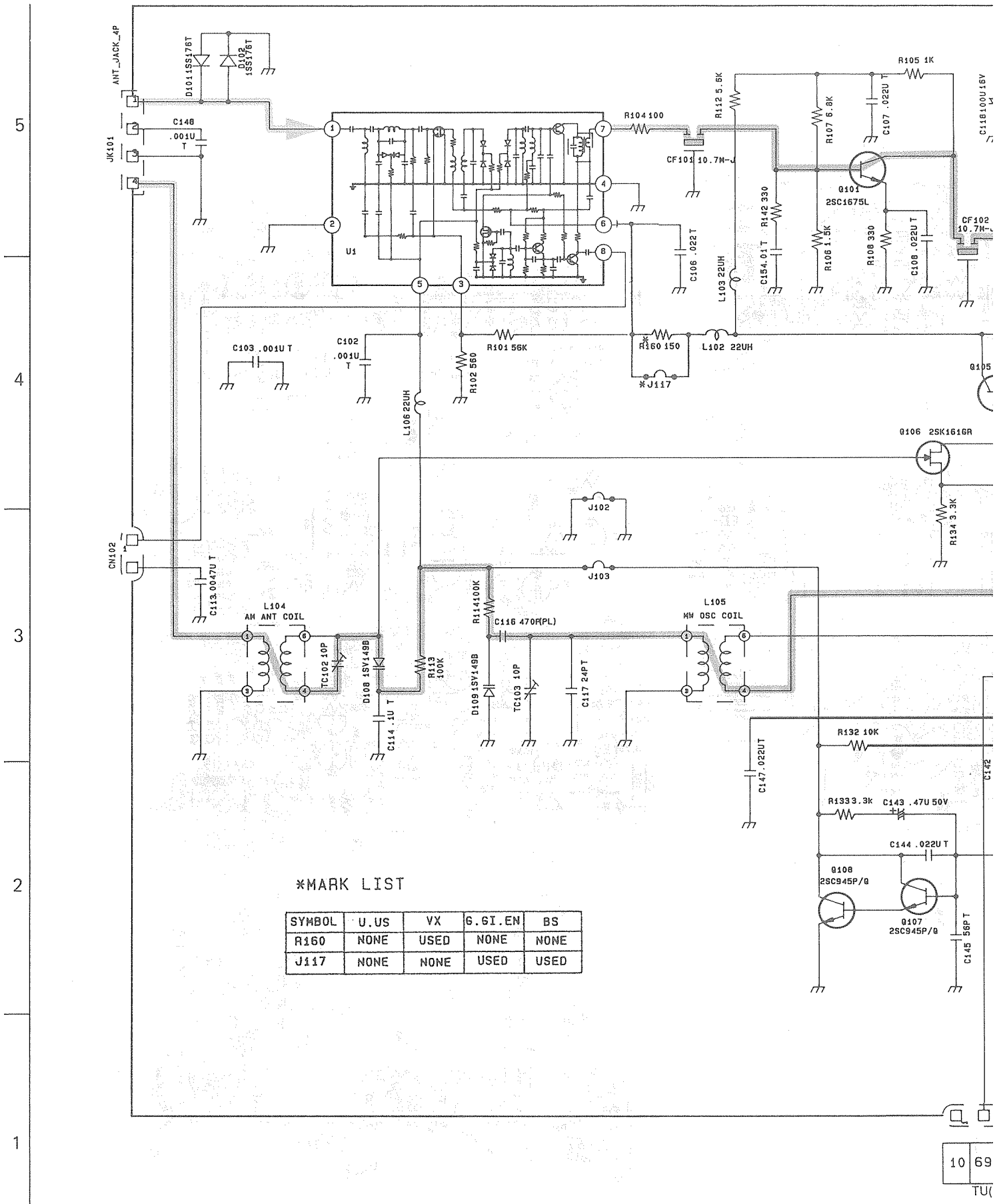

*MARK LIST

SYMBOL	U.US	VX	G.GI.EN	BS
R160	NONE	USED	NONE	NONE
J117	NONE	NONE	USED	USED

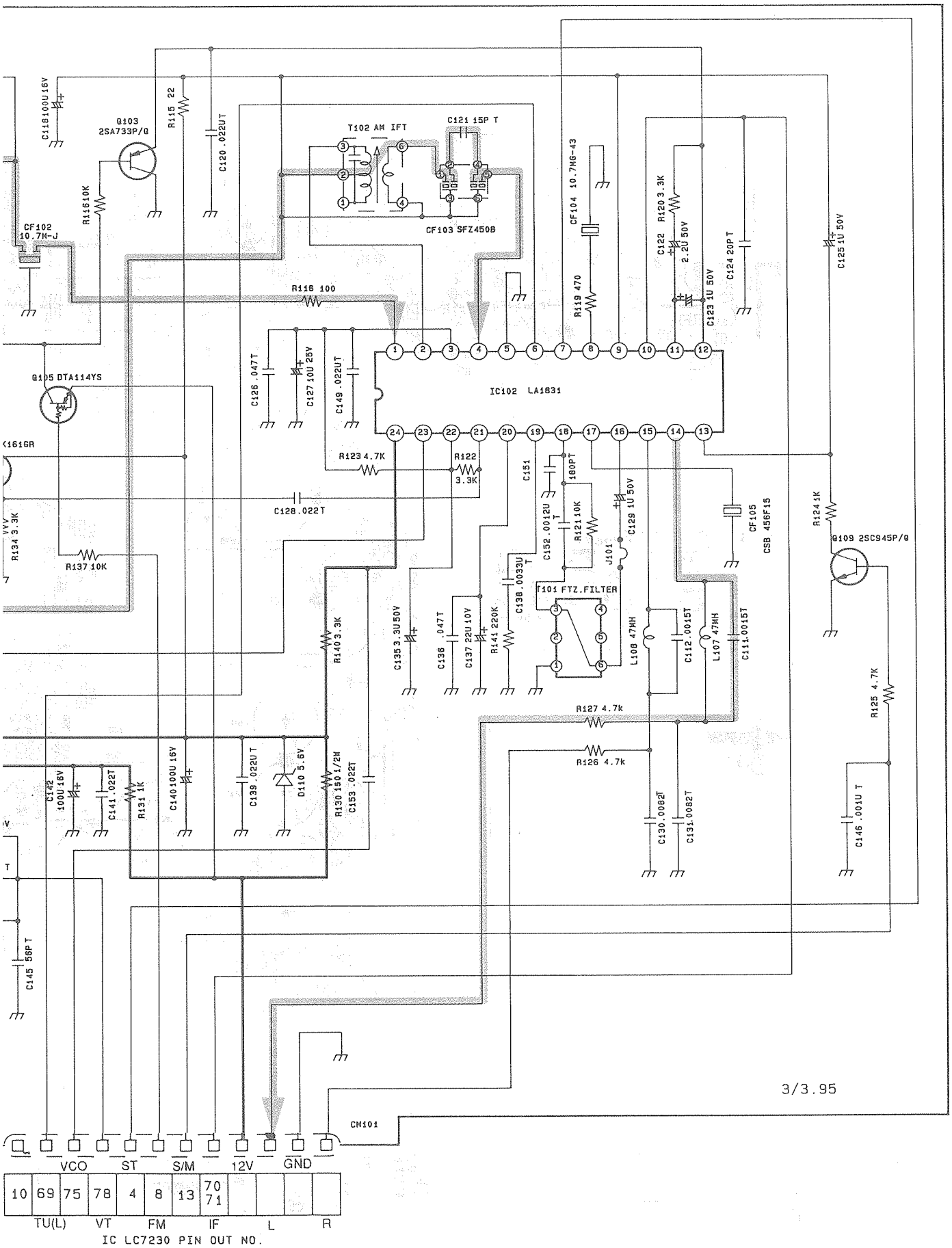
C118 100U 16V
Q103 2SA733P/Q
R115 22
C120 .022UT
T102 AM IFT
C121 15P T
CF103 SFZ450B
CF104 10.7MG-43
R120 3.3K
C122 2.2U 50V
C124 20P T
C125 1U 50V
R11610K
CF102 10.7M-J
R118 100
R119 470
C123 1U 50V
Q105 DTA114YS
C126 .047T
C127 10U 25V
C149 .022UT
IC102 LA1831
R123 4.7K
R122 3.3K
C128 .022T
C151
180PT
C152 .0012U T
R121 10K
C129 1U 50V
J101
CF105 CSB 456F15
R124 1K
Q109 2SC945P/Q
R134 3.3K
R137 10K
C138 .0033U T
T101 FTZ.FILTER
C135 3.3U 50V
C136 .047T
C137 22U 10V
R141 220K
L108 47MH
C112 .0015T
L107 47MH
C111 .0015T
R140 3.3K
R127 4.7k
R126 4.7k
R125 4.7K
C142 100U 16V
C141 .022T
R131 1K
C140 100U 16V
C139 .022UT
D110 5.6V
R130 150 1/2W
C153 .022T
C130 .0082T
C131 .0082T
C146 .001U T
C145 56P T
3/3.95
CN101
VCO
ST
S/M
12V
GND
10
69
75
78
4
8
13
70
71
TU(L)
VT
FM
IF
L
R
IC LC7230 PIN OUT NO.

Printed Circuit Board

Main P.C.Board

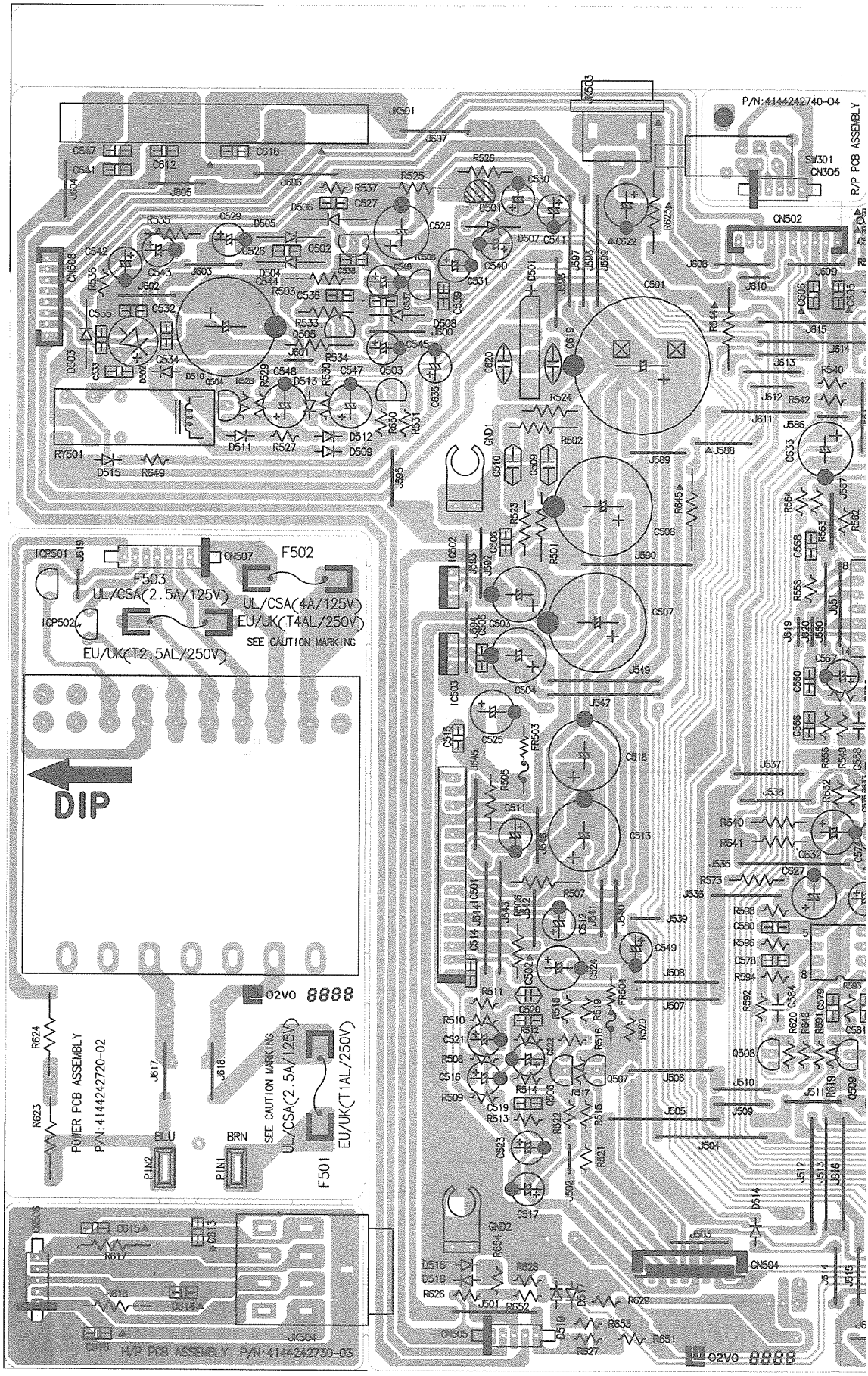

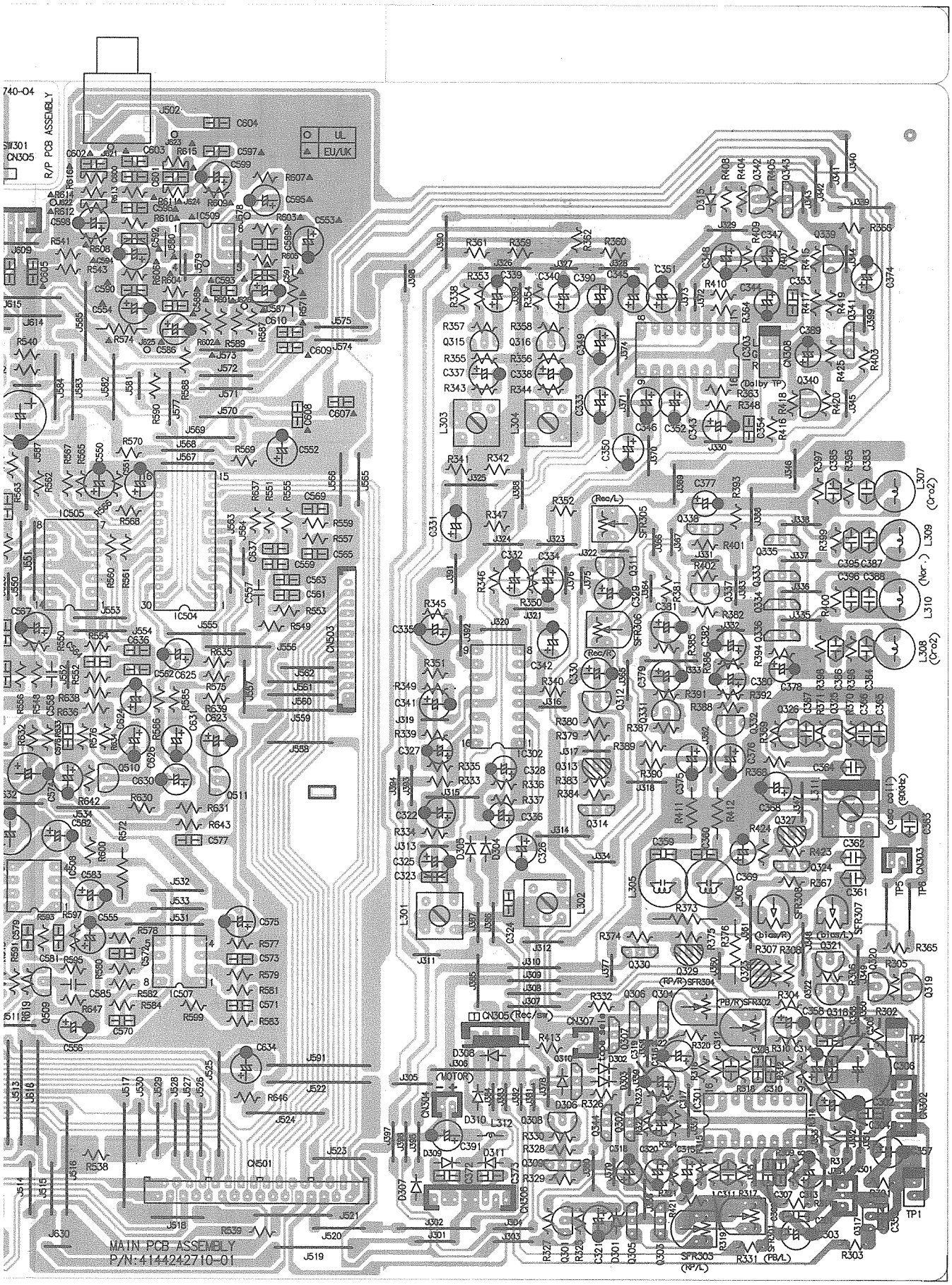
MAIN PCB ASSEMBLY
P/N:4144242710-01
R/P PCB ASSEMBLY
UL
EU/UK
(Dolby TP)
(Rec/L)
(Rec/R)
(Rec/sw)
(MOTOR)
(Cro2)
(Nor.)
(osc coil)
(90kHz)
(bias/R)
(bias/L)
(RP/R)
(PB/R)
(RP/L)
(PB/L)
E
F
G
H

Front P.C.Board

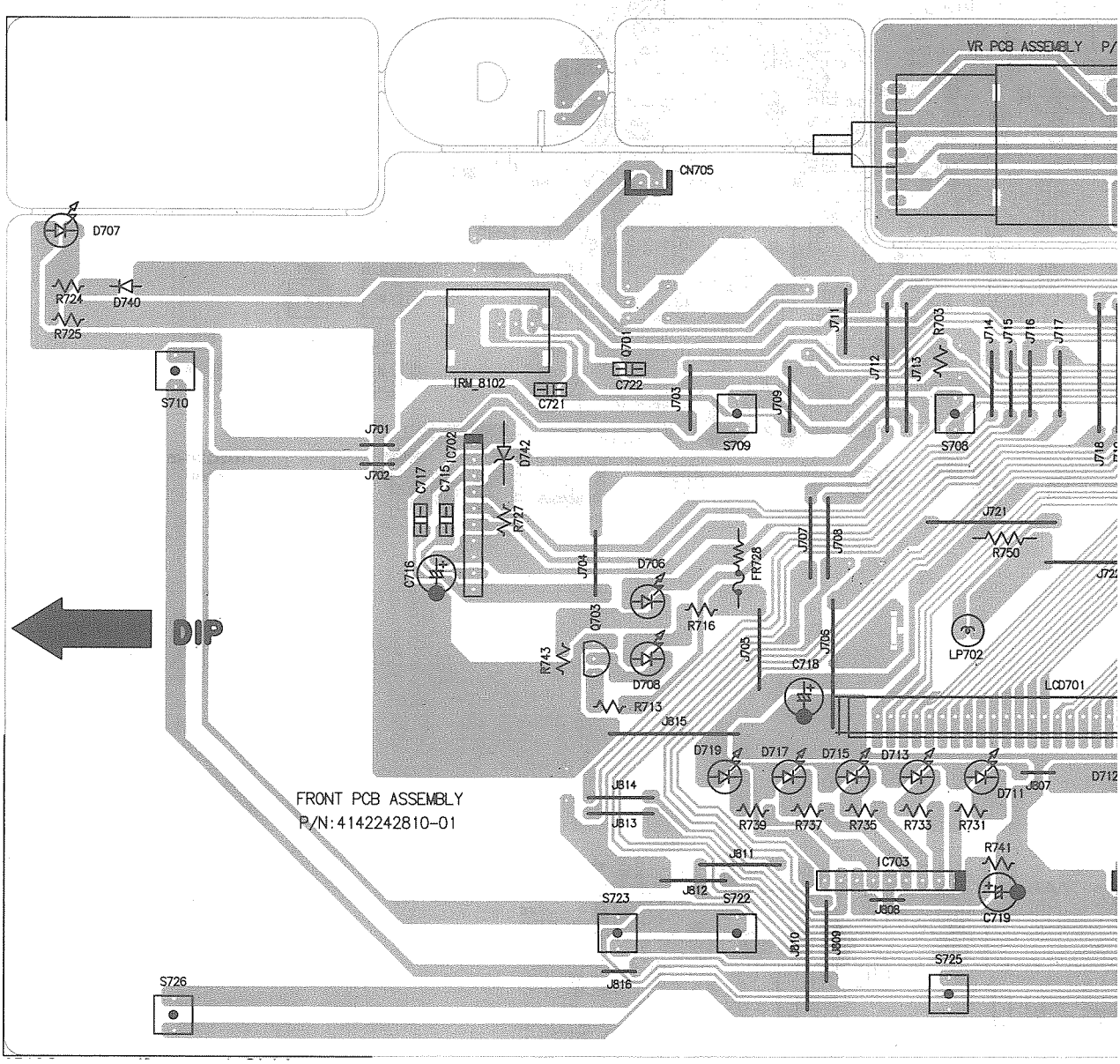

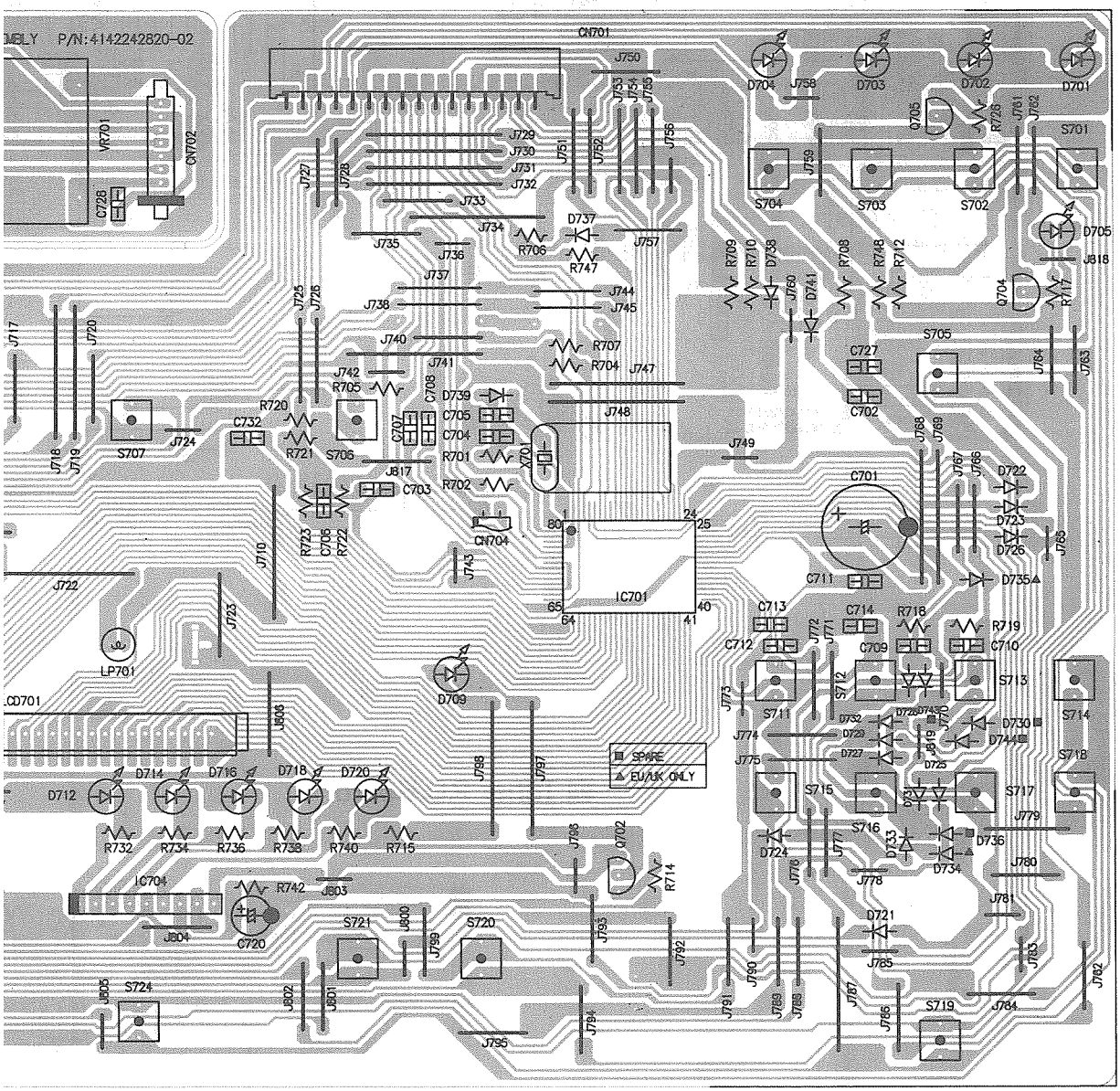
P/N:4142242820-02
CN701
CN702
VR701
C728
J750
D704
J758
D703
D702
D701
Q705
R726
S701
S704
S703
S702
D705
J818
Q704
R717
S705
C727
C702
J764
J763
J729
J730
J731
J732
J733
J734
J735
J736
J737
J738
J740
J741
J742
J744
J745
J747
J748
J749
J751
J752
J753
J754
J755
J756
J757
J759
D737
R706
R747
R707
R704
R705
R720
R721
R722
R723
C732
C703
C704
C705
C706
C707
C708
D739
R701
R702
X701
S706
S707
J724
J717
J718
J719
J720
J725
J726
J727
J728
J817
CN704
IC701
80
24
25
65
64
40
41
J743
J710
J722
J723
LP701
LCD701
J808
D709
J798
J797
SPARE
EU/UK ONLY
D712
D714
D716
D718
D720
R732
R734
R736
R738
R740
R715
IC704
R742
J803
J804
C720
S721
J800
J799
S720
J793
J792
J795
J794
S724
J805
J802
J801
J768
J769
J767
J766
D722
D723
D726
J765
C701
C711
D735
C713
C714
R718
R719
C712
C709
C710
J772
J771
S712
S713
S714
S711
J773
J774
J775
D732
D729
D727
D725
D730
D744
J819
S718
S715
S716
S717
J779
D724
J777
D733
D734
D736
J778
J780
J781
D721
J785
J783
J782
J791
J790
J789
J788
J787
J786
S719
J784

CD Decoder,Lamp,Sensor,Control P.C.Board

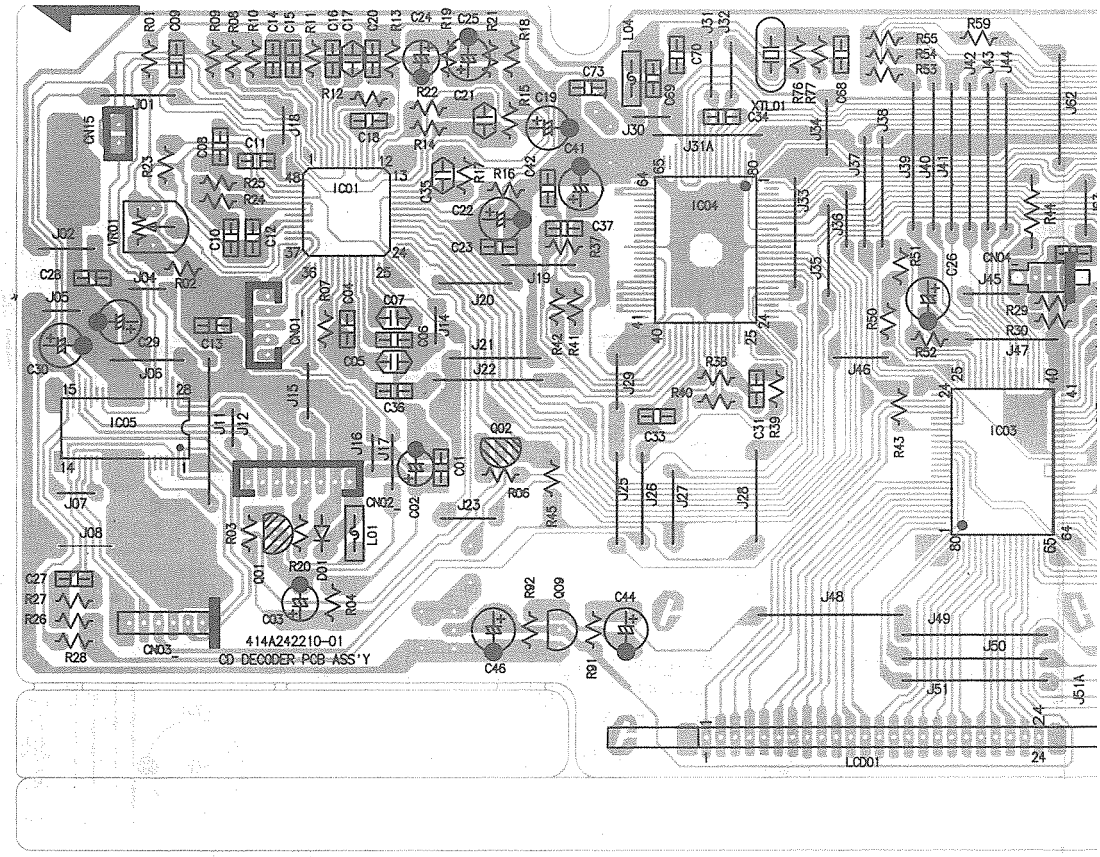

Tuner P.C.Board

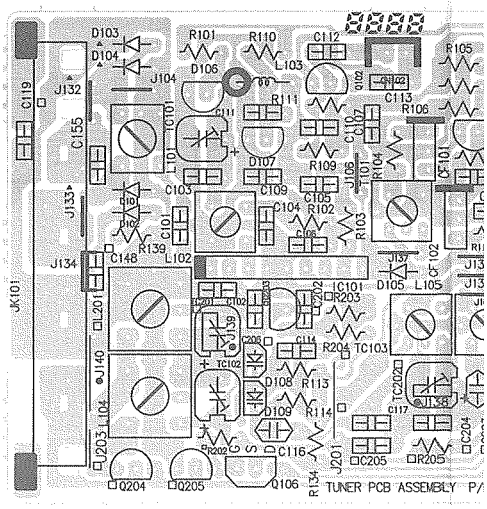

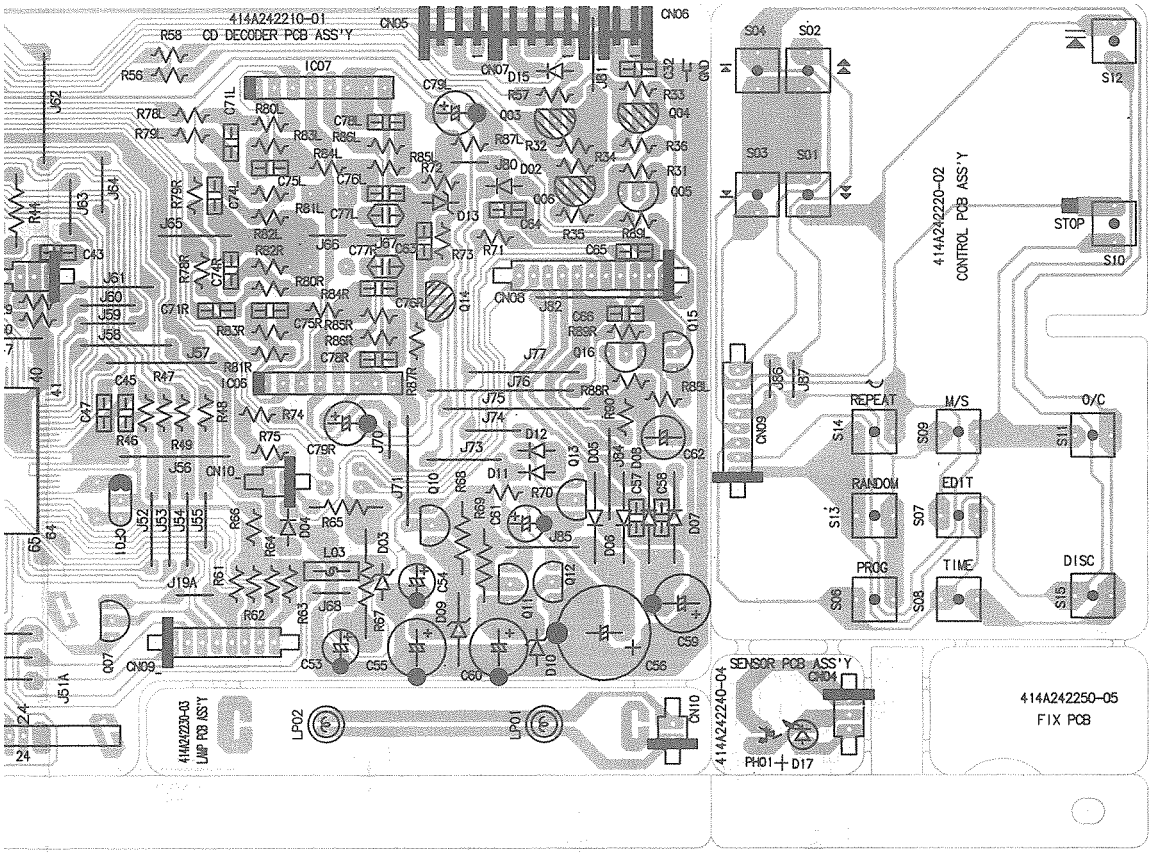
414A242210-01
CD DECODER PCB ASS'Y
414A242220-02
CONTROL PCB ASS'Y
414A242230-03
LAMP PCB ASS'Y
SENSOR PCB ASS'Y
414A242240-04
414A242250-05
FIX PCB
REPEAT
M/S
O/C
RANDOM
EDIT
PROG
TIME
DISC
STOP

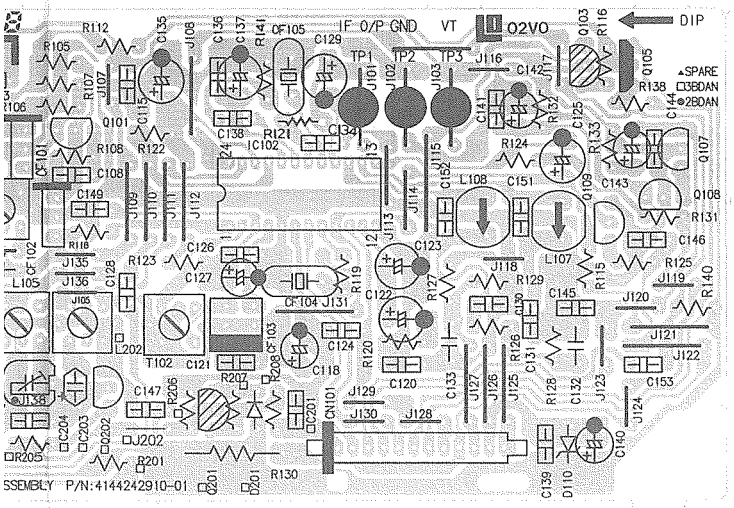
DIP
IF O/P GND
VT
O2VO
SPARE
3BDAN
2BDAN
ASSEMBLY P/N:4144242910-01

E | F | G | H

PARTS LIST

※ **All printed circuit boards and its assemblies are not available as service parts.**

– Contents –

General Exploded View and Parts List 3-2
Changer Mechanism Ass'y and Parts List 3-5
CD Mechanism Ass'y and Parts List 3-8
Cassette Mechanism Ass'y and Parts List 3-9
Electlical Parts List 3-13
■ Main P.C. Board Ass'y 3-13
■ Front P.C. Board Ass'y 3-17
■ CD Decoder P.C. Board Ass'y 3-18
■ Tuner P.C. Board Ass'y 3-19
Accessories List 3-20
Packing Materials and Part Numbers 3-21

General Exploded View and Parts List

Block No. M 1 M M

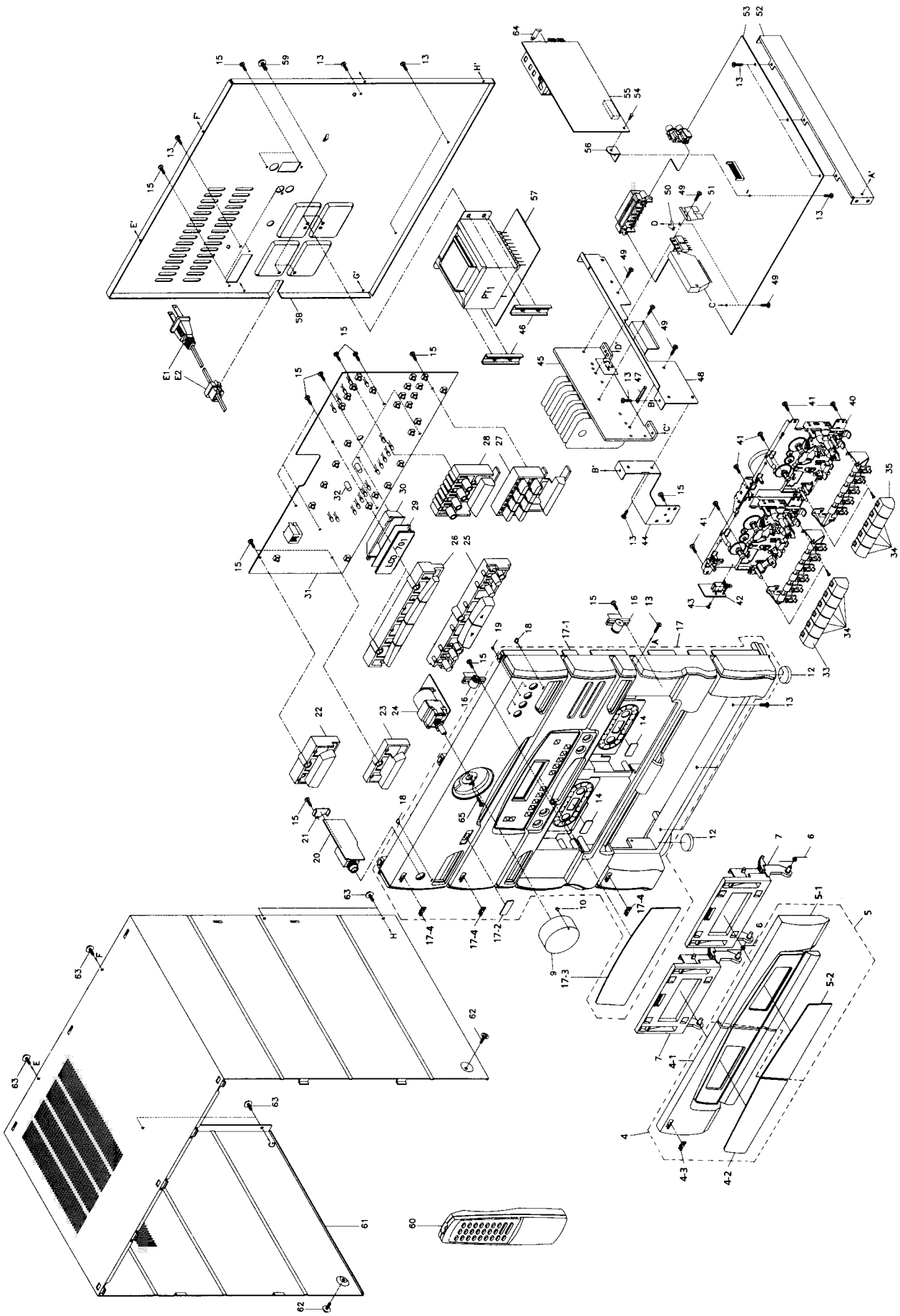

■ Parts List

Block No. M 1 M M

⚠	Item	Part Number	Part Name	Q'ty	Description	Area
	4	EGB1002079510SA	CASSETTE LID ASSY	1		
	4-1	EGB1002079510	CASSETTE LID	1	(A)	
	4-2	EGB1015079510	CASSETTE LENS	1	(A)	
	4-3	EGB1023079510	JVC MARK	1	(A)	
	5	EGB1003079510SA	CASSETTE LID ASSY	1	(B)	
	5-1	EGB1003079510	CASSETTE LID	1	(B)	
	5-2	EGB1016079510	CASSETTE LENS	1	(B)	
	6	EGB2012079510	SPRING	1		
	7	EGB2001079510	CASSETTE HOLDER	2		
	9	EGB1004079510	VOLUME KNOB	1		
	10	EGB1027079510	INDICATOR LENS	1		
	12	EGB2M22550040	RUBBER FOOT	2		
	13	EGB8941300600	SCREW	13		
	14	EGB1045172255	REFLECT PLATE	2		
	15	EGB8741301000	SCREW	16		
	16	EGB2000001265	GEAR DAMPER	2		
	17	EFP-DCME3J(S)	FRONT PANEL ASSY	1		
	17-1	EGB1032079510	FRONT PANEL	1		
	17-2	EGB1013079510	REMOTE CONTROL WINDOW	1		
	17-3	EGB1014079510	WINDOW SCREEN	1		
	17-4	EGB1023079510	JVC MARK	3		
	18	EGB1012079510	INDICATOR LENS	1		
	19	EGB1011079510	INDICATOR LENS	4		
	20	----------	P.C. BOARD ASSY	1	See page 4-13	
	21	EGB2007075907	JACK BRACKET	1		
	22	EGB1005079510	POWER BUTTON	1		
	23	EGB1026079510	PUSH BUTTON	1		
	24	----------	P.C. BOARD ASSY	1	See page 4-13	
	25	EGB1009079510	PUSH BUTTON	1		
	26	EGB1033079510	PUSH BUTTON	1		
	27	EGB1008079510	PUSH BUTTON	1		
	28	EGB1007079510	PUSH BUTTON	1		
	29	EGB1029079510	FLOURESCENT DISPL.SCREEN	1		
	30	EGB2007079510	FL HOLDER	1		
	31	----------	P.C. BOARD ASSY	1	See page 4-16	
	32	EGB2000001205	LAMP COVER	1		
	33	EGB1024079510	CASSETTE BUTTON	1		
	34	EGB1010079510	CASSETTE BUTTON	2		
	35	EGB1025079510	CASSETTE BUTTON	1		
	40	----------	CASSETTE MEHANISM ASSY	1	See page 4-9	
	41	EGB8741300800	SCREW	6		
	42	----------	P.C. BOARD ASSY	1	See page 4-13	
	43	EGB8611200500	SCREW	1		
	44	EGB2003079510	P.W.BOARD BRACKET	1		
⚠	45	EGB2015071234	HEAT SINK	1		
	46	EGB2006079510	TRANSFORMER BRACKET	2		
	47	EGB2000000026	EARTH ROD	1		
	48	EGB2004071234	HEAT SINK BRACKET	1		
	49	EGB8941300800	SCREW	6		
	50	EGB2005079551	EARTH TERMINAL	1		

⚠	Item	Part Number	Part Name	Q'ty	Description	Area
	51	EGB2012076076	TRANSISTOR COVER	1		
	52	EGB2004079510	P.W.BOARD BRACKET	1		
	53	----------	P.C. BOARD ASSY	1	See page 4-13	
	54	EGB2000000152	PLASTIC RIVET	1		
	55	----------	P.C. BOARD ASSY	1		
	56	EGB2011079510	P.W.BOARD BRACKET	1		
	57	----------	P.C. BOARD ASSY	1	See page 4-13	
	58	EGB1028079510	REAR PANEL	1		
	59	EGB8661400800	SCREW	4		
	61	EGB1019079510	METAL COVER	1		
	62	EGB8762301000	SCREW	2		
	63	EGB8962300800	SCREW	6		
	64	EGB2010079510	EARTH TERMINAL	1		
	65	EGB8941260800	SCREW	1		

Changer Mechanism Ass'y and Parts List

Block No. M 2 M M

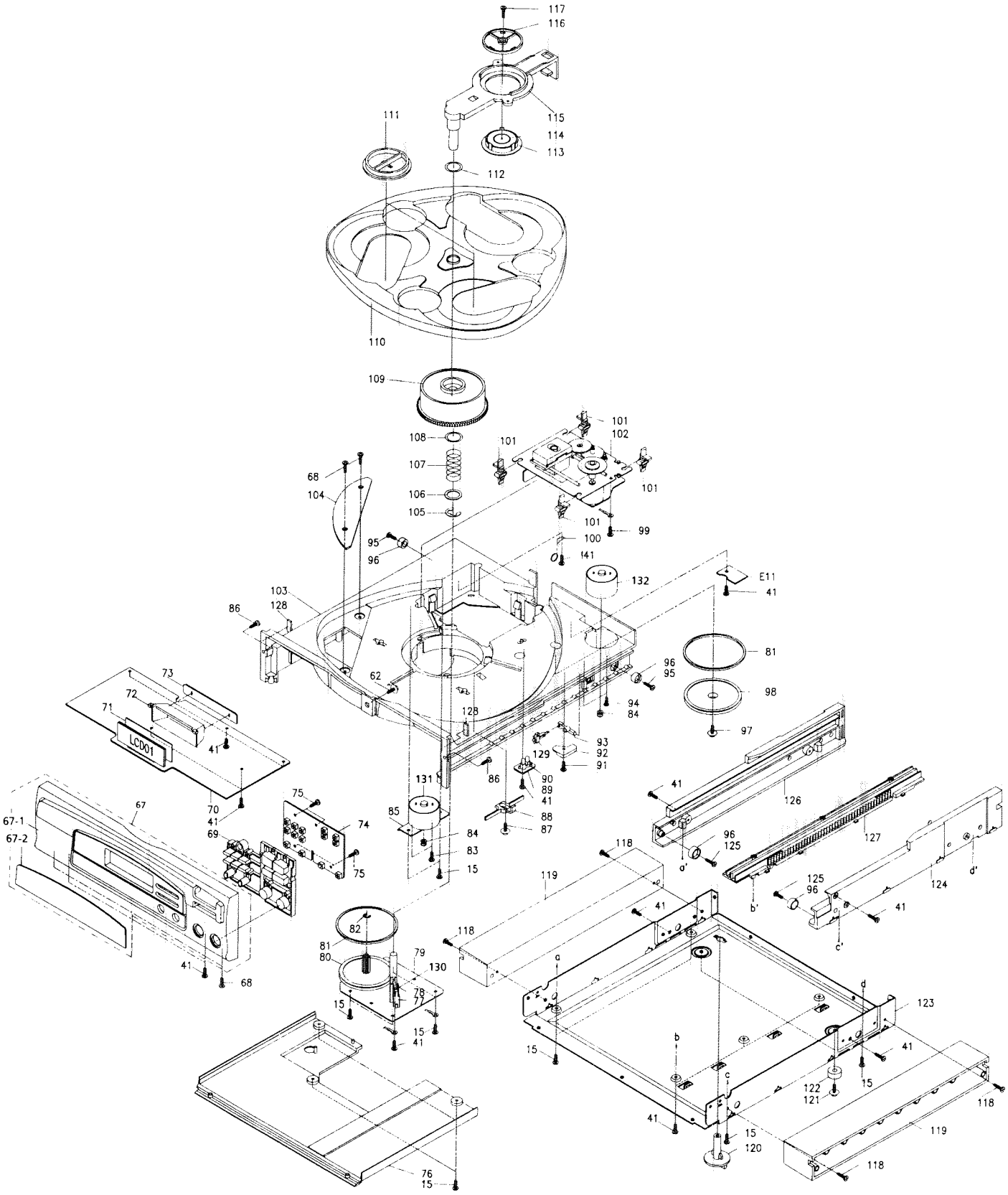

Parts List (Changer Mechanism Ass'y)

Block No. M 2 M M

⚠	Item	Part Number	Part Name	Q'ty	Description	Area
	67	EGB1022079510SA	FRONT PANEL ASSY	1		
	67-1	EGB1017079510	FRONT PANEL	1		
	67-2	EGB1022079510	WINDOW SCREEN	1		
	68	EGB8742260800	SCREW	2		
	69	EGB1018079510	PUSH BUTTON	1		
	70	----------	P.C. BOARD ASSY	1	See page 4-18	
	71	EGB1030079510	FLOURESCENT DISPL.SCREEN	1		
	72	EGB2008079510	FL HOLDER	1		
	73	----------	P.C. BOARD ASSY	1	See page 4-18	
	74	----------	P.C. BOARD ASSY	1	See page 4-18	
	75	EGB8741260800	SCREW	4		
	76	EGB200914JD3N	COVER PLATE	1		
	77	EGB201107131J	SWITCH BOX	1		
	78	EGB201327131J	SWITCH PIN	1		
	79	EGB000114JD3N	MOUNTING PLATE	1		
	80	EGB201007131J	DRIVE PULLEY	1		
	81	EGB201207131J	DRIVE BELT	1		
	82	EGB3130000025	'E' WASHER	1		
	83	EGB8141260300	SCREW	2		
	84	EGB200507131J	MOTOR PULLEY	1		
	85	EGB201104JD3N	MOTOR BRACKET	1		
	86	EGB8732300800	SCREW	2		
	87	EGB8761300800	SCREW	1		
	88	EGB206307131J	GUIDE PLATE	1		
	89	----------	P.C. BOARD ASSY	1	See page 4-18	
	90	EGB206607131J	L.E.D.HOLDER	1		
	91	EGB8741301200	SCREW	1		
	92	EGB2016079510	LEVER PLATE	1		
	93	EGB204117131J	SWITCH LEVER	1		
	94	EGB8141260400	SCREW	2		
	95	EGB8741300600	SCREW	2		
	96	EGB2A2817131J	DRIVE ROLLER	2		
	97	EGB8761260806	SCREW	1		
	98	EGB200504JD3N	DRIVE PULLEY	1		
	99	EGB8661200500	SCREW	1		
	100	EGB201404JD3N	WIRE CLAMP	1		
	101	EGB201204JD3N	RUBBER CUSHION	1		
	102	----------	CD MECHANISM ASSY	1	See page 4-8	
	103	EGB100114JD3N	MECHA BASE	1		
	104	EGB203407131J	COVER PLATE	1		
	105	EGB3130000080	'E' WASHER	1		
	106	EGB202407131J	WASHER	1		
	107	EGB2A0614JD3N	SPRING	1		
	108	EGB201904JD3N	POLY WASHER	1		
	109	EGB200804JD3N	CAM GEAR	1		
	110	EGB1A0214JD3N	TURNTABLE	1		
	111	EGB100314JD3N	LOCK PLATE	1		
	112	EGB210007131J	POLY WASHER	1		
	113	EGB201727131J	CD CLAMPER	1		
	114	EGB202604JD3N	MAGNET	1		

⚠	Item	Part Number	Part Name	Q'ty	Description	Area
	115	EGB000214JD3N	CLAMPER BASE	1		
	116	EGB201607131J	YOKE PLATE	1		
	117	EGB8742260600	SCREW	1		
	118	EGB8941301000	SCREW	4		
	119	EGB2005079510	SIDE BRACKET	2		
	120	EGB100214JD3D	LOCK STOPPER	1		
	121	EGB9861300800	SCREW	1		
	122	EGB1021079510	FOOT	1		
	123	EGB200704JD3N	CHASSIS BASE	1		
	124	EGB2A0214JD3N	SIDE RAIL	1		
	125	EGB8761260608	SCREW	2		
	126	EGB2A0314JD3N	SIDE RAIL	1		
	127	EGB200404JD3N	LOADING CAM	1		
	128	EGB202004JD3N	SPACER	1		
	129	EGB4400000121	LEAF SWITCH	1		
	130	EGB4400000168	LEAF SWITCH	1		
	131	EGB4020100190	D.C. MOTOR	1		
	132	EGB4020100191	D.C. MOTOR	1		

CD Mechanism Ass'y and Parts List

Block No. M 3 M M

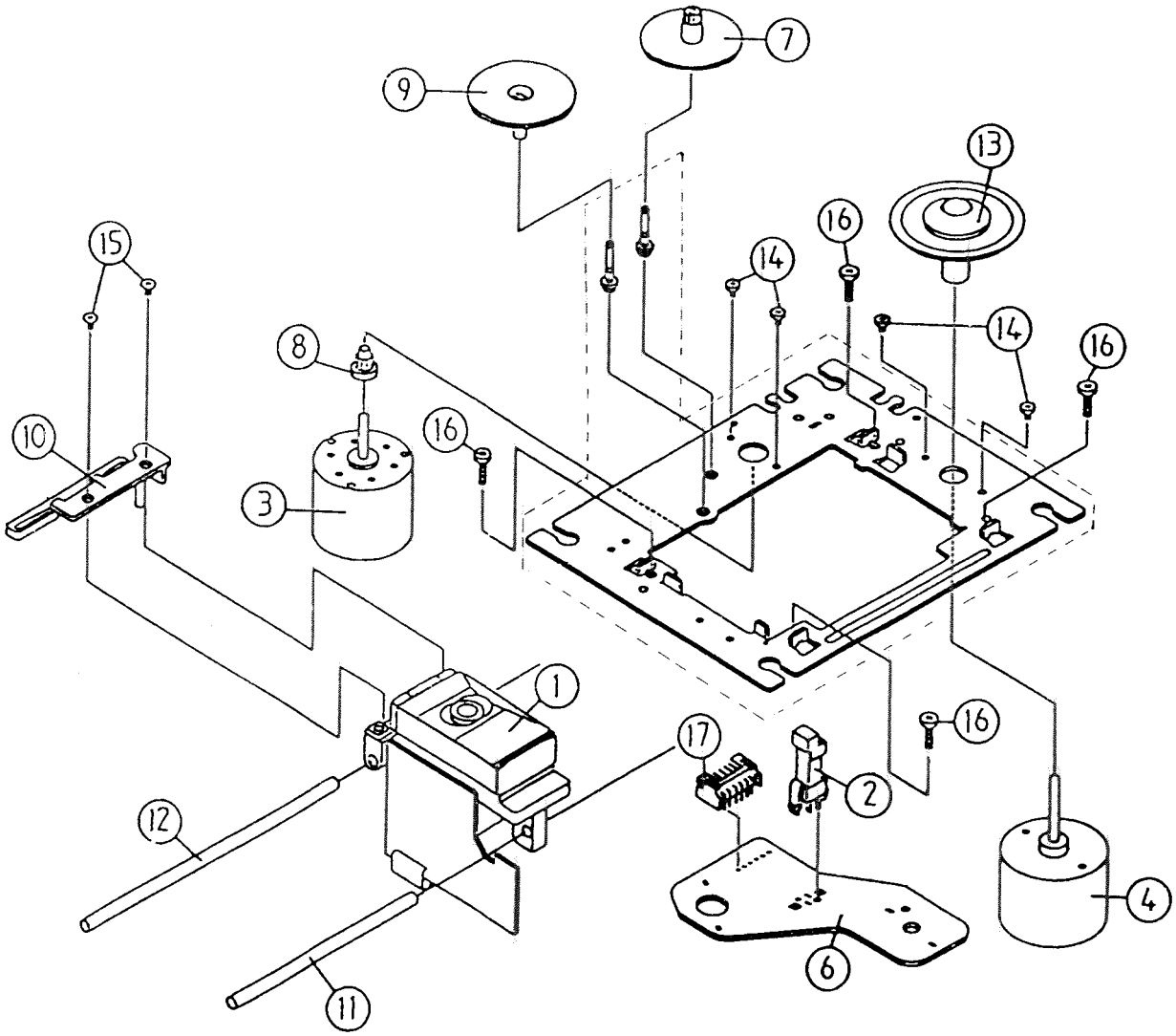

■ Parts List (CD Mechanism Ass'y)

⚠	Item	Part Number	Part Name	Q'ty	Description	Area
	1	EGB2001CDK90V	OPTICAL PICK-UP	1		
	2	EGB4400000194	LEAF SWITCH	1		
	3	EGB4020100193	DC MOTOR	1		
	4	EGB4020100194	SPINDLE MOTOR	1		
	6	EGB2003CDK90V	PRINTED CIRCUT BOARD	1		
	7	EGB2004CDK90V	CAM GEAR	1		
	8	EGB2005CDK90V	MOTOR GEAR	1		
	9	EGB2006CDK90V	CAM GEAR	1		
	10	EGB2007CDK90V	RACK GEAR	1		
	11	EGB2008CDK90V	GUIDE SHAFT	1		
	12	EGB2009CDK90V	GUIDE SHAFT	1		
	13	EGB2010CDK90V	TURNTABLE ASSY	1		
	14	EGB2011CDK90V	SCREW	4		
	15	SSSP2004N	SCREW	2		
	16	EGB2013CDK90V	SCREW	2		
	17	EGB2014CDK90V	CONNECT TERMINAL	1		

Cassette Mechanism Ass'y and Parts List

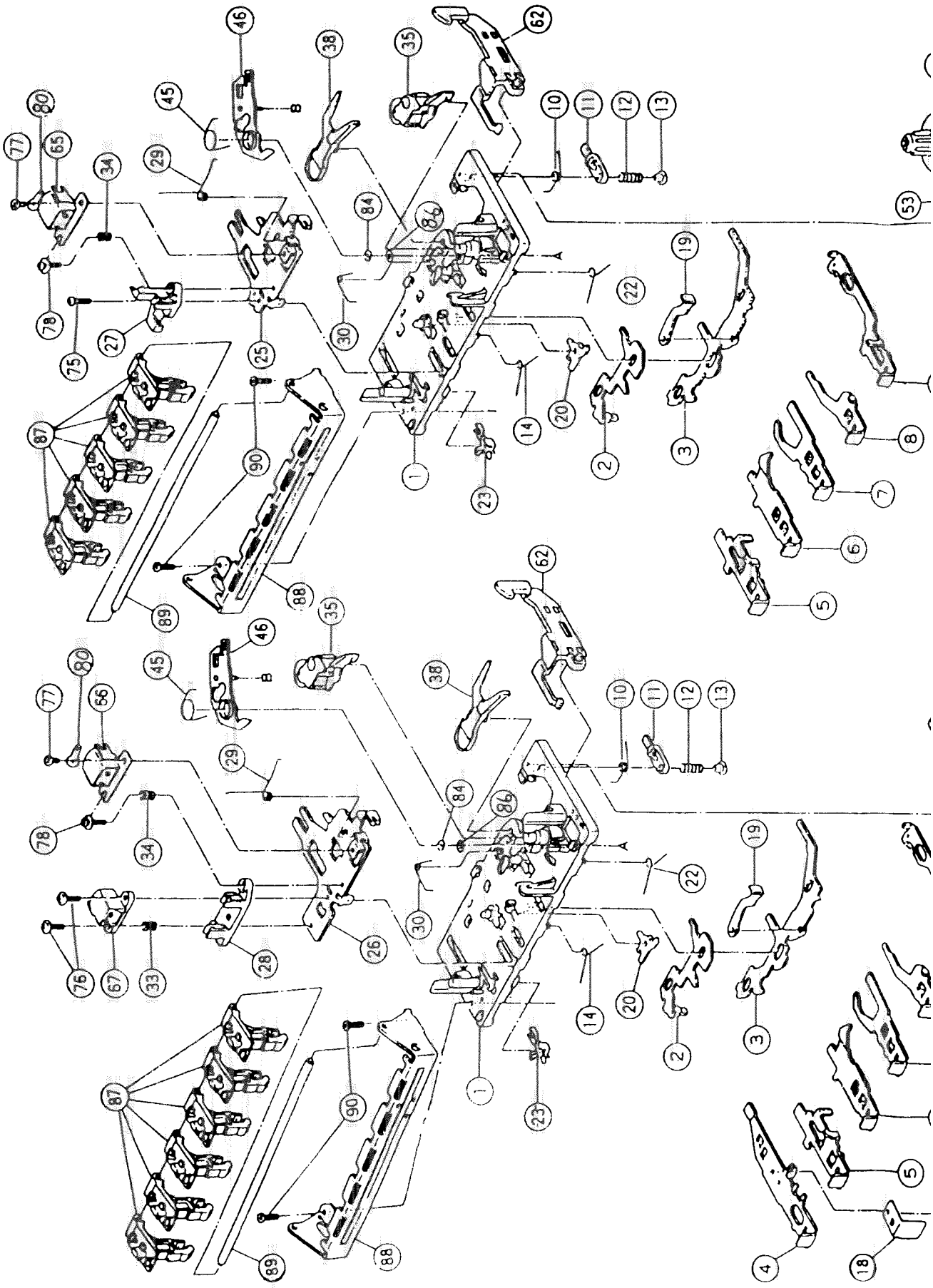

Block No. M 4 M M

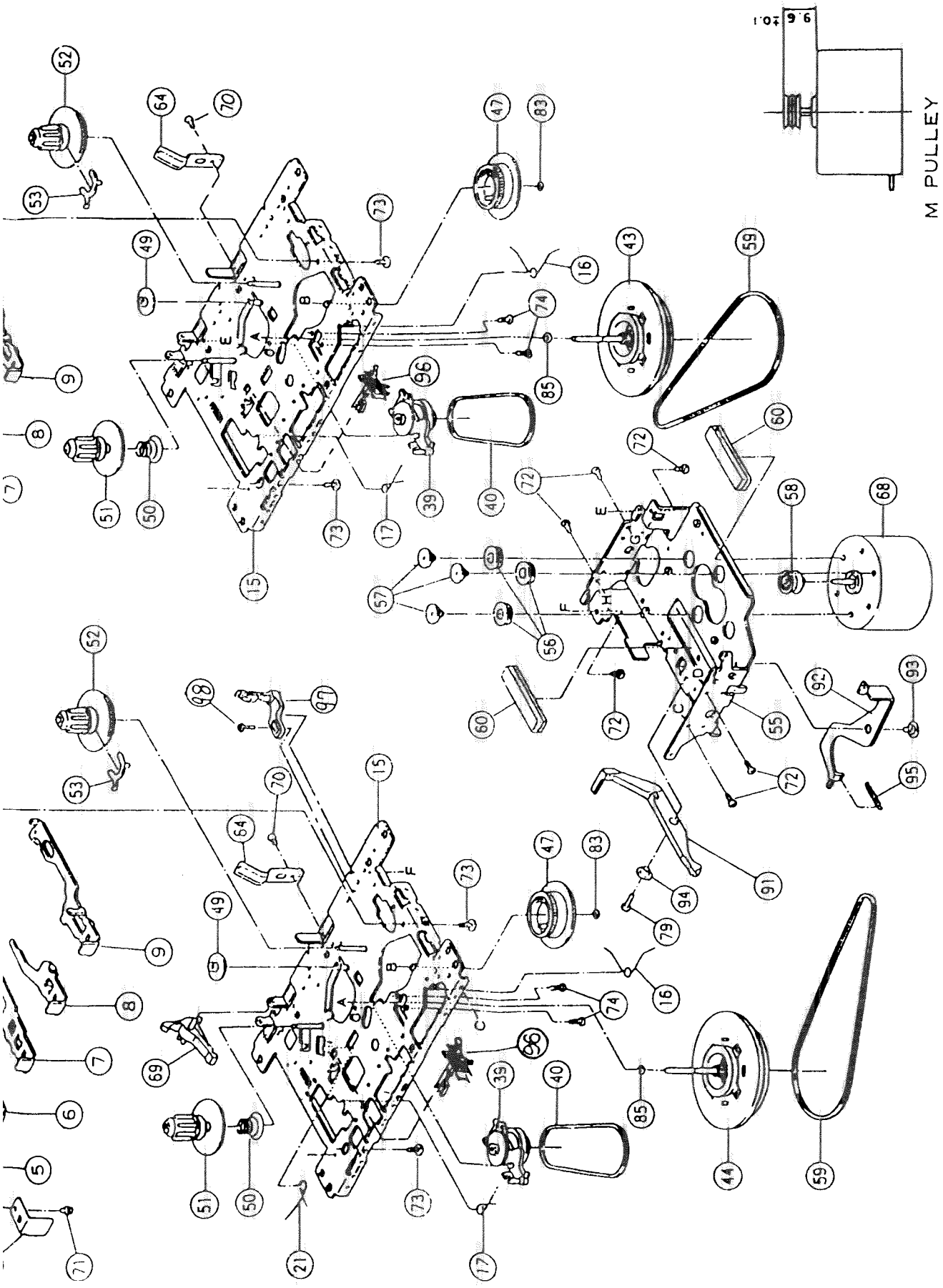

Block No. M 4 M M

■ Parts List (Cassette Mechanism Ass'y)

⚠	Item	Part Number	Part Name	Q'ty	Description	Area
	1	192114301ZT	BASE ASS'Y	2		
	2	19211409T	SWITCH PLATE	2		
	3	19211408T	LOCK ARM	2		
	4	19211422T	PUSH LEVER	1		
	5	19211423T	PUSH LEVER	2		
	6	19211424T	PUSH LEVER	2		
	7	19211425T	PUSH LEVER	2		
	8	19211426T	PUSH LEVER	2		
	9	19211461T	PUSH LEVER	2		
	10	19211413T	SPRING	2		
	11	19211455T	PAUSE LEVER	2		
	12	19211412T	SPRING	2		
	13	19211411T	LOCK STOPPER	2		
	14	19211414T	SPRING	2		
	15	192101501ZT	CHASSIS ASS'Y	2		
	16	19211416T	SPRING	2		
	17	19211417T	SPRING	2		
	18	15100217T	SPRING	1		
	19	182101159	E KICK LEVER	2		
	20	19211420T	ARM STOPPER	2		
	21	19211421T	SPRING	1		
	22	19211415T	SPRING	2		
	23	MSW-1541T	LEAF SWITCH	2		
	25	19210311T	HEAD PANEL	1		
	26	19210312T	HEAD PANEL	1		
	27	19210304AT	HEAD BASE	1		
	28	19210306T	HEAD BASE	1		
	29	19210309T	SPRING	2		
	30	19211418AT	SPRING	2		
	33	18210308T	EH.SPRING	1		
	34	18210307T	AZIMUTH SPRING	2		
	35	192104309T	PINCH ROLLER	2		
	38	19212604TT	KICK LEVER	2		
	39	192107308T	R.F.CLUTCH	2		
	40	19210703T	FR BELT	2		
	43	192109304ZT	FLYWHEEL ASS'Y	1		
	44	192109303ZT	FLYWHEEL ASS'Y	1		
	45	19212605T	SPRING	2		
	46	192126501ZT	GEAR PLATE ASSY	2		
	47	19212602T	CAM GEAR	2		
	49	18211070T	IDLER GEAR	2		
	50	18211099T	TENSION SPRING	2		
	51	192105306T	REEL DISK	2		
	52	192105305T	TAKE-UP REEL DISK	2		
	53	19210506T	ADJUST RING	2		
	55	19211211T	MOTOR BRACKET	1		
	56	18211266T	RUBBER BUSHING	3		
	57	18511418T	MOTOR COLLAR SCREW	3		
	58	19211224T	MOTOR PULLEY	1		
	59	19210924T	CAPSTAN BELT	2		

⚠	Item	Part Number	Part Name	Q'ty	Description	Area
	60	19211212T	SPACER	2		
	62	19211302T	SLIDE LEVER	2		
	64	18291001T	SPRING	2		
	65	MS15R-AA2N1	RECORD & PLAYBACK HEAD	2		
	67	LE15D-C1	ERASE HEAD	1		
	68	SHL2L50	DC MOTOR	1		
	69	18211069T	KICK LEVER	1		
	70	9P3320032T	SCREW	2		
	71	91790000T	SCREW	1		
	72	91800000T	SCREW	6		
	73	96790000T	SCREW	4		
	74	99991809T	SCREW	4		
	75	90040000T	SCREW	1		
	76	92230000T	SCREW	2		
	77	91150000T	SCREW	2		
	78	99220000T	SCREW	2		
	79	9P0420061T	TAPPING SCREW	1		
	80	94800000T	CLIP TERMINAL	2		
	83	94220000T	WASHER	2		
	84	99997001T	WASHER	2		
	85	98820000T	POLY WASHER	2		
	86	99990003T	POLY WASHER	2		
	87	18213107T	SELECT LEVER	11		
	88	18213106T	FRAM	2		
	89	18293103T	SHAFT	2		
	90	99991402T	SCREW	4		
	91	19211209T	KICK LEVER	1		
	92	18211268T	KICK LEVER	1		
	93	18211223T	SCREW	1		
	94	18211265T	COLLAR	1		
	95	18211225T	SPRING	1		
	96	64050123T	LEAF SWITCH	2		
	97	MSW-1664	LEAF SWITCH	1		
	98	96610000T	SCREW	1		

Electlical Parts List

Notice

If symbol numbers have 3 letters or more on P.C.Board, those will be changed to the ones as the followings on Parts Lists.

GND = GN
ICP = CP
XTL = XT
IRMB = IC

SFR = RA
PIN = P
LCD = U

If symbol numbers on P.C. Boards have 2digits, "0" will be added in front of the figures on Parts List.

(eg) IC02 → IC002
↑ on P.C.B
↑ on Parts List

And, if "L" on "R" is described on the symbol numbers end, delete it and "0" will be added in front of the figures in case of "L" and two "0"s for "R".

(eg) R84L → R084
R84R → R0084
↑ on P.C.B.
↑ on Parts List

■ Main P.C. Board Ass'y

Block No. 0 1

TRANSISTORS

⚠	ITEM	PART NUMBER	DESCRIPTION	AREA
	Q301	2SC945	SI.TRANSIST NEC	
	Q302	DTC144ES	DIGITAL TRA ROHM	
	Q303	DTC114TN	DIGITAL TRA ROHM	
	Q304	DTC114TN	DIGITAL TRA ROHM	
	Q305	DTC114TN	DIGITAL TRA ROHM	
	Q306	DTC114TN	DIGITAL TRA ROHM	
	Q307	DTC124ES	DIGITAL TRA 0021	
	Q308	2SC945	SI.TRANSIST NEC	
	Q309	DTC114TN	DIGITAL TRA ROHM	
	Q310	DTC124ES	DIGITAL TRA 0021	
	Q311	2SC2878	SI.TRANSIST 9743	
	Q312	2SC2878	SI.TRANSIST 9743	
	Q313	2SA733A(P,K)	SI.TRANSIST NEC	
	Q314	DTC144ES	DIGITAL TRA ROHM	
	Q315	2SC945	SI.TRANSIST NEC	
	Q316	2SC945	SI.TRANSIST NEC	
	Q317	2SC945	SI.TRANSIST NEC	
	Q318	2SC945	SI.TRANSIST NEC	
	Q319	2SC2060(Q,R)	SI.TRANSIST ROHM	
	Q320	2SC2060(Q,R)	SI.TRANSIST ROHM	
	Q321	2SC2060(Q,R)	SI.TRANSIST ROHM	
	Q322	2SC2060(Q,R)	SI.TRANSIST ROHM	
	Q323	2SA733A(P,K)	SI.TRANSIST NEC	
	Q324	DTC114TN	DIGITAL TRA ROHM	
	Q325	2SC1815	SI.TRANSIST TOSHIBA	
	Q326	2SC1815	SI.TRANSIST TOSHIBA	
	Q327	2SA952(L,K)	SI.TRANSIST NEC	
	Q329	2SA952(L,K)	SI.TRANSIST NEC	
	Q330	DTC114TN	DIGITAL TRA ROHM	
	Q331	2SC945	SI.TRANSIST NEC	
	Q332	2SC945	SI.TRANSIST NEC	
	Q333	DTC114TN	DIGITAL TRA ROHM	
	Q334	DTC114TN	DIGITAL TRA ROHM	
	Q335	DTC114TN	DIGITAL TRA ROHM	
	Q336	DTC114TN	DIGITAL TRA ROHM	
	Q337	2SC945	SI.TRANSIST NEC	
	Q338	DTC114TN	DIGITAL TRA ROHM	
	Q339	2SC945	SI.TRANSIST NEC	
	Q340	2SC945	SI.TRANSIST NEC	
	Q341	DTC124TS	DIGITAL TRA ROHM	
	Q342	2SC945	SI.TRANSIST NEC	
	Q343	DTC114TN	DIGITAL TRA ROHM	
	Q344	DTC124ES	DIGITAL TRA 0021	
	Q501	2SA733A(P,K)	SI.TRANSIST NEC	
	Q502	2SC945	SI.TRANSIST NEC	
	Q503	2SC945	SI.TRANSIST NEC	
	Q504	2SC945	SI.TRANSIST NEC	
	Q505	2SC2060(Q,R)	SI.TRANSIST ROHM	
	Q506	2SC2878	SI.TRANSIST 9743	
	Q507	2SC2878	SI.TRANSIST 9743	
	Q508	2SC945	SI.TRANSIST NEC	
	Q509	2SC945	SI.TRANSIST NEC	
	Q510	2SC945	SI.TRANSIST NEC	
	Q511	2SC945	SI.TRANSIST NEC	

I.C.S.

⚠	ITEM	PART NUMBER	DESCRIPTION	AREA
	IC301	EGB415307784P	I.C(MONO-AN 8103	
	IC302	EGB41530B135P	I.C(MONO-AN 8103	
	IC303	EGB415C01101P	I.C(MONO-AN 8103	
	IC501	EGB4152044120	I.C(M) 8103	
	IC502	MC7812CT	I.C(MONO-AN 7061	BS
	IC502	MC7812CT	I.C(MONO-AN 7061	EF
	IC502	MC7812CT	I.C(MONO-AN 7061	EN
	IC502	MC7812CT	I.C(MONO-AN 7061	G
	IC502	MC7812CT	I.C(MONO-AN 7061	GI
	IC502	MC7812CT	I.C(MONO-AN 7061	US
	IC502	UPC7812H	I.C(MONO-AN NEC	VX
	IC504	EGB4152078210	I.C(DIGI-MO 8103	
	IC505	UPD4066BC	I.C(DIGI-MO NEC	
	IC506	NJM78L06A	I.C(MONO-AN 8103	
	IC507	EGB4159045580	I.C(MONO-AN 8103	
	IC508	EGB4159045580	I.C(MONO-AN 8103	
	IC509	BA4558	I.C(MONO-AN RRRR	BS
	IC509	BA4558	I.C(MONO-AN RRRR	VX
	IC509	NJM4558D	I.C(MONO-AN	EF
	IC509	NJM4558D	I.C(MONO-AN	EN
	IC509	NJM4558D	I.C(MONO-AN	G
	IC509	NJM4558D	I.C(MONO-AN	GI
	IC509	NJM4558D	I.C(MONO-AN	US

DIODES

⚠	ITEM	PART NUMBER	DESCRIPTION	AREA
	D301	MTZ10B	ZENER DIODE ROHM	
	D302	1SS176-A7	SI.DIODE 6997	
	D303	1SS176-A7	SI.DIODE 6997	
	D304	1SS176-A7	SI.DIODE 6997	
	D305	1SS176-A7	SI.DIODE 6997	
	D306	1SS176-A7	SI.DIODE 6997	
	D307	1SS176-A7	SI.DIODE 6997	
	D308	1SS176-A7	SI.DIODE 6997	
	D309	1SS176-A7	SI.DIODE 6997	
	D310	1SS176-A7	SI.DIODE 6997	
	D311	1SS176-A7	SI.DIODE 6997	
	D315	1SS176-A7	SI.DIODE 6997	
⚠	D501	EGB41300GBL02	DIODE 8103	
	D502	EGB413022W02G	DIODE 8103	
	D503	EGB4138104002	SI.DIODE 8103	
	D504	EGB4138104002	SI.DIODE 8103	
	D505	EGB4138104002	SI.DIODE 8103	
	D506	EGB4138104002	SI.DIODE 8103	
	D507	RD12JSB2	ZENER DIODE NEC	
	D508	EGB412152130J	ZENER DIODE 8103	
	D509	1SS176-A7	SI.DIODE 6997	
	D510	1SS176-A7	SI.DIODE 6997	
	D511	1SS176-A7	SI.DIODE 6997	
	D512	1SS176-A7	SI.DIODE 6997	
	D513	1SS176-A7	SI.DIODE 6997	
	D514	1SS176-A7	SI.DIODE 6997	
	D515	1SS176-A7	SI.DIODE 6997	
	D516	1SS176-A7	SI.DIODE 6997	
	D517	1SS176-A7	SI.DIODE 6997	
	D518	1SS176-A7	SI.DIODE 6997	
	D519	1SS176-A7	SI.DIODE 6997	

CAPACITORS

⚠	ITEM	PART NUMBER	DESCRIPTION			AREA
	C301	QCBB1HK-561Y	560PF	50V	CER.CAPACI	
	C302	QCBB1HK-561Y	560PF	50V	CER.CAPACI	
	C303	QETB1HM-475E	4.7MF	50V	E.CAPACITO	
	C304	QETB1HM-475E	4.7MF	50V	E.CAPACITO	
	C305	QCGB1HK-102	1000PF	50V	CER.CAPACI	
	C306	QETB0JM-108N	1000MF	6.3V	E.CAPACITO	
	C307	QCEB1HK-681Y	680PF	50V	CER.CAPACI	
	C308	QCBB1HK-681Y	680PF	50V	CER.CAPACI	
	C309	QCBB1HK-681Y	680PF	50V	CER.CAPACI	
	C310	QCBB1HK-681Y	680PF	50V	CER.CAPACI	
	C311	QFN81HJ-103	0.01MF	50V	METAL.MYLA	
	C312	QFN81HJ-103	0.01MF	50V	METAL.MYLA	
	C313	QETB1CM-226	22MF	16V	E.CAPACITO	
	C314	QETB1CM-226	22MF	16V	E.CAPACITO	
	C315	QETB1HM-475E	4.7MF	50V	E.CAPACITO	
	C316	QETB1HM-475E	4.7MF	50V	E.CAPACITO	
	C317	QETB1CM-107	100MF	16V	AL E.CAPAC	
	C318	QETB1CM-476	47MF	16V	AL E.CAPAC	
	C319	QETB1EM-106	10MF	25V	AL E.CAPAC	
	C320	QETB1AM-107	100MF	10V	AL E.CAPAC	
	C321	QETB1EM-106	10MF	25V	AL E.CAPAC	
	C322	QETB1CM-227E	220MF	16V	E.CAPACITO	
	C323	QCGB1HK-102	1000PF	50V	CER.CAPACI	
	C324	QCGB1HK-102	1000PF	50V	CER.CAPACI	
	C325	QETB1HM-105	1MF	50V	AL E.CAPAC	
	C326	QETB1HM-105	1MF	50V	AL E.CAPAC	
	C327	QETB1CM-107	100MF	16V	AL E.CAPAC	
	C328	QETB1CM-226	22MF	16V	E.CAPACITO	
	C329	QETB1HM-105	1MF	50V	AL E.CAPAC	
	C330	QETB1HM-105	1MF	50V	AL E.CAPAC	
	C331	QETB1HM-105	1MF	50V	AL E.CAPAC	
	C332	QETB1HM-105	1MF	50V	AL E.CAPAC	
	C333	QETB1HM-474	0.47MF	50V	E.CAPACITO	
	C334	QETB1HM-474	0.47MF	50V	E.CAPACITO	
	C335	QETB1EM-106	10MF	25V	AL E.CAPAC	
	C336	QETB1CM-476	47MF	16V	AL E.CAPAC	
	C337	QETB1HM-105	1MF	50V	AL E.CAPAC	
	C338	QETB1HM-105	1MF	50V	AL E.CAPAC	
	C339	QETB1HM-105	1MF	50V	AL E.CAPAC	
	C340	QETB1HM-105	1MF	50V	AL E.CAPAC	
	C341	QETB1HM-105	1MF	50V	AL E.CAPAC	
	C342	QETB1HM-105	1MF	50V	AL E.CAPAC	
	C343	QETB1HM-105	1MF	50V	AL E.CAPAC	
	C344	QETB1CM-107	100MF	16V	AL E.CAPAC	
	C345	QETB1HM-684N	0.68MF	50V	E.CAPACITO	
	C346	QETB1HM-684N	0.68MF	50V	E.CAPACITO	
	C347	QETB1CM-107	100MF	16V	AL E.CAPAC	
	C348	QETB1EM-106	10MF	25V	AL E.CAPAC	
	C349	QETB1HM-475E	4.7MF	50V	E.CAPACITO	
	C350	QETB1HM-475E	4.7MF	50V	E.CAPACITO	
	C351	QETB1HM-475E	4.7MF	50V	E.CAPACITO	
	C352	QETB1HM-475E	4.7MF	50V	E.CAPACITO	
	C353	QCGB1HK-102	1000PF	50V	CER.CAPACI	
	C354	QCGB1HK-102	1000PF	50V	CER.CAPACI	
	C355	QCBB1HK-561Y	560PF	50V	CER.CAPACI	
	C356	QCBB1HK-561Y	560PF	50V	CER.CAPACI	
	C357	QETB1HM-105	1MF	50V	AL E.CAPAC	
	C358	QETB1HM-105	1MF	50V	AL E.CAPAC	
	C359	QCBB1HK-471Y	470PF	50V	CER.CAPACI	
	C360	QCBB1HK-471Y	470PF	50V	CER.CAPACI	
	C361	EGB5092221411			METAL POLY	
	C362	EGB5092221411			METAL POLY	
	C363	QFP82AJ-183	0.018MF	100V	POLYPROPY.	
	C364	QFN81HJ-103	0.01MF	50V	METAL.MYLA	
	C365	QFN81HJ-103	0.01MF	50V	METAL.MYLA	
	C366	QFN31HJ-332Z	3300PF	50V	MYLAR CAPA	
	C367	QFN31HJ-332Z	3300PF	50V	MYLAR CAPA	
	C368	QETB1HM-475E	4.7MF	50V	E.CAPACITO	
	C369	QETB1EM-106	10MF	25V	AL E.CAPAC	
	C372	QFN81HK-104	0.1MF	50V	METAL.MYLA	
	C373	QFN81HK-104	0.1MF	50V	METAL.MYLA	
	C374	QETB1HM-474	0.47MF	50V	E.CAPACITO	
	C375	QETB1HM-475E	4.7MF	50V	E.CAPACITO	
	C376	QETB1HM-475E	4.7MF	50V	E.CAPACITO	
	C377	QETB1CM-336	33MF	16V	AL E.CAPAC	
	C378	QETB1CM-336	33MF	16V	AL E.CAPAC	
	C379	QETB1EM-106	10MF	25V	AL E.CAPAC	
	C380	QETB1EM-106	10MF	25V	AL E.CAPAC	
	C381	QETB1HM-334	0.33MF	50V	AL E.CAPAC	
	C382	QETB1HM-334	0.33MF	50V	AL E.CAPAC	
	C383	QFN81HJ-183	0.018MF	50V	METAL.MYLA	
	C384	QFN81HJ-183	0.018MF	50V	METAL.MYLA	
	C385	QFN41HJ-153	0.015MF	50V	MYLAR CAPA	
	C386	QFN41HJ-153	0.015MF	50V	MYLAR CAPA	
	C387	QFN81HJ-103	0.01MF	50V	METAL.MYLA	
	C388	QFN81HJ-103	0.01MF	50V	METAL.MYLA	
	C389	QETB1CM-226	22MF	16V	E.CAPACITO	
	C390	QETB1CM-476	47MF	16V	AL E.CAPAC	
	C391	QETB1CM-227E	220MF	16V	E.CAPACITO	
	C395	QFN31HJ-332Z	3300PF	50V	MYLAR CAPA	
	C396	QFN31HJ-332Z	3300PF	50V	MYLAR CAPA	
	C397	QFN51HM-475	4.7MF	50V	MYLAR	
	C501	EGB5154332263			E.CAPACITO	
	C503	QETB1CM-477M	470MF	16V	E.CAPACITO	
	C505	QFN81HK-104	0.1MF	50V	METAL.MYLA	
	C506	QFN81HK-104	0.1MF	50V	METAL.MYLA	
	C507	QETB1HM-108	1000MF	50V	AL E.CAPAC	
	C508	QETB1HM-108	1000MF	50V	AL E.CAPAC	
	C509	QFN81HJ-104	0.1MF	50V	METAL.MYLA	
	C510	QFN81HJ-104	0.1MF	50V	METAL.MYLA	
	C511	QETB1EM-476	47MF	25V	AL E.CAPAC	
	C512	QETB1EM-476	47MF	25V	AL E.CAPAC	
	C513	QETB1JM-107	100MF	63V	AL E.CAPAC	
	C514	QCGB1HK-102	1000PF	50V	CER.CAPACI	
	C515	QCGB1HK-102	1000PF	50V	CER.CAPACI	
	C516	QETB1HM-105	1MF	50V	AL E.CAPAC	
	C517	QETB1HM-105	1MF	50V	AL E.CAPAC	
	C518	QETB1JM-107	100MF	63V	AL E.CAPAC	
	C519	QCBB1HK-471Y	470PF	50V	CER.CAPACI	
	C520	QCBB1HK-471Y	470PF	50V	CER.CAPACI	

CAPACITORS

⚠	ITEM	PART NUMBER	DESCRIPTION			AREA
	C521	QETB1EM-476	47MF	25V	AL E.CAPAC	
	C522	QETB1HM-105	1MF	50V	AL E.CAPAC	
	C523	QETB1HM-105	1MF	50V	AL E.CAPAC	
	C524	QETB1CM-227E	220MF	16V	E.CAPACITO	
	C525	QETB1CM-227F	220MF	16V	E.CAPACITO	
	C526	QCHB1EZ-223	0.022MF	25V	CER.CAPACI	
	C527	QCHB1EZ-223	0.022MF	25V	CER.CAPACI	
	C528	QETB1EM-477F	470MF	25V	E.CAPACITO	
	C529	QETB1EM-227	220MF	25V	AL E.CAPAC	
	C530	QETB1CM-107	100MF	16V	AL E.CAPAC	
	C531	QETB1CM-476	47MF	16V	AL E.CAPAC	
	C532	QCHB1EZ-223	0.022MF	25V	CER.CAPACI	
	C533	QCHB1EZ-223	0.022MF	25V	CER.CAPACI	
	C534	QCHB1EZ-223	0.022MF	25V	CER.CAPACI	
	C535	QCHB1EZ-223	0.022MF	25V	CER.CAPACI	
	C536	QCHB1EZ-223	0.022MF	25V	CER.CAPACI	
	C537	QCHB1EZ-223	0.022MF	25V	CER.CAPACI	
	C538	QCHB1EZ-223	0.022MF	25V	CER.CAPACI	
	C539	QCHB1EZ-223	0.022MF	25V	CER.CAPACI	
	C540	QETB1CM-476	47MF	16V	AL E.CAPAC	
	C541	QETB1CM-476	47MF	16V	AL E.CAPAC	
	C542	QETB1HM-475E	4.7MF	50V	E.CAPACITO	
	C543	QETB2AM-476	47MF	100V	AL E.CAPAC	
	C544	QETB1VM-338	3300MF	35V	AL E.CAPAC	
	C545	QETB1CM-107	100MF	16V	AL E.CAPAC	
	C546	QETB1CM-107	100MF	16V	AL E.CAPAC	
	C547	QETB1CM-227F	220MF	16V	E.CAPACITO	
	C548	QETB1EM-476	47MF	25V	AL E.CAPAC	
	C549	QETB1CM-476	47MF	16V	AL E.CAPAC	
	C550	QETB1CM-476	47MF	16V	AL E.CAPAC	
	C551	QETB1HM-104N	0.1MF	50V	E.CAPACITO	
	C552	QETB1CM-476	47MF	16V	AL E.CAPAC	
	C555	QETB1CM-476	47MF	16V	AL E.CAPAC	
	C556	QETB1CM-476	47MF	16V	AL E.CAPAC	
	C557	QCZ0205-155	1.5MF	25V	C.CAPACITO	
	C557	QETB1CM-476	47MF	16V	AL E.CAPAC	
	C558	QCZ0205-155	1.5MF	25V	C.CAPACITO	
	C559	QCVB1CM-822Y	8200PF	16V	CER.CAPACI	
	C560	QCGB1HK-102	1000PF	50V	CER.CAPACI	
	C563	QCVB1CM-822Y	8200PF	16V	CER.CAPACI	
	C564	QCVB1CM-822Y	8200PF	16V	CER.CAPACI	
	C565	QCXB1CM-332Y	3300PF	16V	CER.CAPACI	
	C566	QCXB1CM-332Y	3300PF	16V	CER.CAPACI	
	C567	QETB1CM-476	47MF	16V	AL E.CAPAC	
	C568	QCZ0205-155	1.5MF	25V	C.CAPACITO	
	C569	QCZ0205-155	1.5MF	25V	C.CAPACITO	
	C570	QCSB1HJ-150Y	15PF	50V	CER.CAPACI	
	C571	QCSB1HJ-150Y	15PF	50V	CER.CAPACI	
	C572	QCBB1HK-101Y	100PF	50V	CER.CAPACI	
	C573	QCBB1HK-101Y	100PF	50V	CER.CAPACI	
	C574	QETB1HM-225	2.2MF	50V	AL E.CAPAC	
	C575	QETB1HM-225	2.2MF	50V	AL E.CAPAC	
	C576	QCBB1HK-101Y	100PF	50V	CER.CAPACI	
	C577	QCBB1HK-101Y	100PF	50V	CER.CAPACI	
	C578	QCHB1EZ-223	0.022MF	25V	CER.CAPACI	
	C579	QCHB1EZ-223	0.022MF	25V	CER.CAPACI	
	C580	QCBB1HK-101Y	100PF	50V	CER.CAPACI	
	C581	QCBB1HK-101Y	100PF	50V	CER.CAPACI	
	C582	QETB1HM-225	2.2MF	50V	AL E.CAPAC	
	C583	QETB1HM-225	2.2MF	50V	AL E.CAPAC	
	C584	EGB5105683132			CER.CAPACI	
	C585	EGB5105683132			CER.CAPACI	
	C598	QETB1HM-475E	4.7MF	50V	E.CAPACITO	
	C599	QETB1HM-475E	4.7MF	50V	E.CAPACITO	
	C619	QCF21HP-103A	0.01MF	50V	CER.CAPACI	
	C620	QCF21HP-103A	0.01MF	50V	CER.CAPACI	
	C623	QETB1HM-225	2.2MF	50V	AL E.CAPAC	
	C624	QETB1HM-225	2.2MF	50V	AL E.CAPAC	
	C625	QETB1HM-225	2.2MF	50V	AL E.CAPAC	
	C626	QETB1HM-225	2.2MF	50V	AL E.CAPAC	
	C627	QETB1CM-227F	220MF	16V	E.CAPACITO	
	C630	QETB1HM-225	2.2MF	50V	AL E.CAPAC	
	C631	QETB1HM-225	2.2MF	50V	AL E.CAPAC	
	C632	QETB1CM-227E	220MF	16V	E.CAPACITO	
⚠	C633	QETB1CM-108	1000MF	16V	AL E.CAPAC	
	C634	QETB1HM-225	2.2MF	50V	AL E.CAPAC	
	C635	QETB1HM-225	2.2MF	50V	AL E.CAPAC	
	C636	QFN81HK-104	0.1MF	50V	METAL.MYLA	
	C637	QFN81HK-104	0.1MF	50V	METAL.MYLA	
	C638	QETB1CM-477M	470MF	16V	E.CAPACITO	
	C639	QFN81HJ-104	0.1MF	50V	METAL.MYLA	
	C641	QETB1HM-105	1MF	50V	AL E.CAPAC	
	C642	QETB1HM-105	1MF	50V	AL E.CAPAC	
	C649	QFN81HJ-104	0.1MF	50V	METAL.MYLA	

RESISTORS

⚠	ITEM	PART NUMBER	DESCRIPTION			AREA
	R301	QRD161J-100	10	1/6W	CARBON RES	
	R302	QRD161J-100	10	1/6W	CARBON RES	
	R303	QRD161J-473	47K	1/6W	CARBON RES	
	R304	QRD161J-473	47K	1/6W	CARBON RES	
	R305	QRD161J-103	10K	1/6W	CARBON RES	
	R306	QRD161J-103	10K	1/6W	CARBON RES	
	R307	QRD161J-472	4.7K	1/6W	CARBON RES	
	R308	QRD161J-472	4.7K	1/6W	CARBON RES	
	R309	QRD167J-151	150	1/6W	CARBON RES	
	R310	QRD167J-151	150	1/6W	CARBON RES	
	R311	QRD161J-683	68K	1/6W	CARBON RES	
	R312	QRD161J-683	68K	1/6W	CARBON RES	
	R313	QRD161J-683	68K	1/6W	CARBON RES	
	R314	QRD161J-683	68K	1/6W	CARBON RES	
	R315	QRD167J-334	330K	1/6W	CARBON RES	
	R316	QRD167J-334	330K	1/6W	CARBON RES	
	R317	QRD161J-183	18K	1/6W	CARBON RES	
	R318	QRD161J-183	18K	1/6W	CARBON RES	
	R319	QRD167J-153	15K	1/6W	CARBON RES	
	R320	QRD167J-153	15K	1/6W	CARBON RES	
	R321	QRD167J-151	150	1/6W	CARBON RES	
	R322	QRD167J-223	22K	1/6W	CARBON RES	
	R323	QRD161J-473	47K	1/6W	CARBON RES	
	R324	QRD161J-103	10K	1/6W	CARBON RES	
	R325	QRD161J-222	2.2K	1/6W	CARBON RES	
	R326	QRD167J-153	15K	1/6W	CARBON RES	
	R327	QRD167J-223	22K	1/6W	CARBON RES	
	R328	QRD161J-103	10K	1/6W	CARBON RES	
	R329	QRD161J-103	10K	1/6W	CARBON RES	
	R330	QRD167J-223	22K	1/6W	CARBON RES	
	R331	QRD161J-472	4.7K	1/6W	CARBON RES	
	R332	QRD161J-472	4.7K	1/6W	CARBON RES	
	R333	QRD167J-153	15K	1/6W	CARBON RES	
	R334	QRD161J-271	270	1/6W	CARBON RES	
	R335	QRD167J-223	22K	1/6W	CARBON RES	
	R336	QRD161J-103	10K	1/6W	CARBON RES	
	R337	QRD161J-472	4.7K	1/6W	CARBON RES	
	R338	QRD161J-102	1K	1/6W	CARBON RES	
	R339	QRD167J-334	330K	1/6W	CARBON RES	
	R340	QRD167J-334	330K	1/6W	CARBON RES	
	R341	QRD167J-562	5.6K	1/6W	CARBON RES	
	R342	QRD167J-562	5.6K	1/6W	CARBON RES	
	R343	QRD161J-222	2.2K	1/6W	CARBON RES	
	R344	QRD161J-222	2.2K	1/6W	CARBON RES	
	R345	QRD167J-334	330K	1/6W	CARBON RES	
	R346	QRD161J-472	4.7K	1/6W	CARBON RES	
	R347	QRD161J-103	10K	1/6W	CARBON RES	
	R348	QRD167J-433	43K	1/6W	CARBON RES	
	R349	QRD161J-104	100K	1/6W	CARBON RES	
	R350	QRD161J-104	100K	1/6W	CARBON RES	
	R351	QRD161J-104	100K	1/6W	CARBON RES	
	R352	QRD161J-104	100K	1/6W	CARBON RES	
	R353	QRD161J-472	4.7K	1/6W	CARBON RES	
	R354	QRD161J-472	4.7K	1/6W	CARBON RES	
	R355	QRD161J-472	4.7K	1/6W	CARBON RES	
	R356	QRD161J-472	4.7K	1/6W	CARBON RES	
	R357	QRD161J-105	1M	1/6W	CARBON RES	
	R358	QRD161J-105	1M	1/6W	CARBON RES	
	R361	QRD161J-472	4.7K	1/6W	CARBON RES	
	R362	QRD161J-472	4.7K	1/6W	CARBON RES	
	R363	QRD161J-473	47K	1/6W	CARBON RES	
	R364	QRD161J-473	47K	1/6W	CARBON RES	
	R365	QRD161J-1R0	1	1/6W	CARBON RES	
	R366	QRD161J-104	100K	1/6W	CARBON RES	
	R367	QRD161J-472	4.7K	1/6W	CARBON RES	
	R368	QRD161J-330	33	1/6W	CARBON RES	
	R369	QRD161J-330	33	1/6W	CARBON RES	
	R370	QRD167J-273	27K	1/6W	CARBON	
	R371	QRD167J-273	27K	1/6W	CARBON	
⚠	R373	QRD125J-220	22	1/2W	UNF.CARBON	
	R374	QRD161J-103	10K	1/6W	CARBON RES	
	R375	QRD161J-472	4.7K	1/6W	CARBON RES	
	R376	QRD121J-101	100	1/2W	CARBON RES	
	R379	QRD161J-103	10K	1/6W	CARBON RES	
	R380	QRD161J-103	10K	1/6W	CARBON RES	
	R381	QRD161J-331	330	1/6W	CARBON RES	
	R382	QRD161J-331	330	1/6W	CARBON RES	
	R383	QRD161J-472	4.7K	1/6W	CARBON RES	
	R384	QRD161J-103	10K	1/6W	CARBON RES	
	R385	QRD161J-472	4.7K	1/6W	CARBON RES	
	R386	QRD161J-472	4.7K	1/6W	CARBON RES	
	R387	QRD161J-125	1.2M	1/6W	CARBON RES	
	R388	QRD161J-125	1.2M	1/6W	CARBON RES	
	R389	QRD167J-153	15K	1/6W	CARBON RES	
	R390	QRD167J-153	15K	1/6W	CARBON RES	
	R391	QRD161J-182	1.8K	1/6W	CARBON RES	
	R392	QRD161J-182	1.8K	1/6W	CARBON RES	
	R393	QRD161J-104	100K	1/6W	CARBON RES	
	R394	QRD161J-104	100K	1/6W	CARBON RES	
	R395	QRD161J-472	4.7K	1/6W	CARBON RES	
	R396	QRD161J-472	4.7K	1/6W	CARBON RES	
	R397	QRD161J-392	3.9K	1/6W	CARBON RES	
	R398	QRD161J-392	3.9K	1/6W	CARBON RES	
	R399	QRD167J-680	68	1/6W	CARBON RES	
	R400	QRD167J-680	68	1/6W	CARBON RES	
	R401	QRD161J-103	10K	1/6W	CARBON RES	
	R402	QRD161J-103	10K	1/6W	CARBON RES	
	R403	QRD161J-103	10K	1/6W	CARBON RES	
	R404	QRD167J-221	220	1/6W	CARBON RES	
	R405	QRD161J-103	10K	1/6W	CARBON RES	
	R407	QRD161J-103	10K	1/6W	CARBON RES	
	R408	QRD161J-103	10K	1/6W	CARBON RES	
	R409	QRD161J-103	10K	1/6W	CARBON RES	
	R410	QRD161J-391	390	1/6W	CARBON RES	
	R411	QRD148J-222S	2.2K	1/4W	CARBON	
	R412	QRD148J-222S	2.2K	1/4W	CARBON	
	R413	QRD167J-223	22K	1/6W	CARBON RES	
	R415	QRD167J-273	27K	1/6W	CARBON	
	R416	QRD167J-273	27K	1/6W	CARBON	
	R417	QRD167J-562	5.6K	1/6W	CARBON RES	

RESISTORS

⚠	ITEM	PART NUMBER	DESCRIPTION			AREA
	R418	QRD167J-562	5.6K	1/6W	CARBON RES	
	R419	QRD161J-473	47K	1/6W	CARBON RES	
	R420	QRD161J-473	47K	1/6W	CARBON RES	
	R421	QRD161J-332YTT	3.3K	1/6W	CARBON RES	
	R422	QRD161J-332YTT	3.3K	1/6W	CARBON RES	
	R423	QRD167J-223	22K	1/6W	CARBON RES	
	R424	QRD161J-473	47K	1/6W	CARBON RES	
	R425	QRD161J-332YTT	3.3K	1/6W	CARBON RES	
⚠	R501	QRD125J-470	47	1/2W	UNF.CARBON	
⚠	R502	QRD125J-470	47	1/2W	UNF.CARBON	
⚠	R503	QRD126J-181	180	1/2W	UNF.CARBON	
	R505	QRD148J-123S	12K	1/4W	CARBON	
	R506	QRD148J-123S	12K	1/4W	CARBON	
	R507	EGB4270210155			METAL FILM	
	R508	QRD161J-104	100K	1/6W	CARBON RES	
	R509	QRD161J-104	100K	1/6W	CARBON RES	
	R510	QRD161J-104	100K	1/6W	CARBON RES	
	R511	QRD161J-274	270K	1/6W	CARBON RES	
	R512	QRD167J-223	22K	1/6W	CARBON RES	
	R513	QRD167J-223	22K	1/6W	CARBON RES	
	R514	QRD167J-223	22K	1/6W	CARBON RES	
	R515	QRD167J-223	22K	1/6W	CARBON RES	
	R516	QRD161J-104	100K	1/6W	CARBON RES	
	R517	QRD161J-104	100K	1/6W	CARBON RES	
	R518	QRD161J-222	2.2K	1/6W	CARBON RES	
	R519	QRD161J-222	2.2K	1/6W	CARBON RES	
	R520	QRD161J-473	47K	1/6W	CARBON RES	
	R521	QRD161J-222	2.2K	1/6W	CARBON RES	
	R522	QRD161J-222	2.2K	1/6W	CARBON RES	
	R523	QRD148J-102	1K	1/4W	CARBON	
	R524	QRD148J-102	1K	1/4W	CARBON	
	R525	EGB4270210955			METAL FILM	
	R526	QRD148J-221S	220	1/4W	CARBON	
	R527	QRD161J-332YTT	3.3K	1/6W	CARBON RES	
	R528	QRD161J-123	12K	1/6W	CARBON RES	
	R529	QRD161J-472	4.7K	1/6W	CARBON RES	
	R530	QRD161J-102	1K	1/6W	CARBON RES	
	R531	QRD161J-103	10K	1/6W	CARBON RES	
	R533	QRD148J-102	1K	1/4W	CARBON	
	R534	EGB4270210955			METAL FILM	
	R535	EGB4270247255			METAL FILM	
	R536	QRD161J-472	4.7K	1/6W	CARBON RES	
	R537	QRD161J-103	10K	1/6W	CARBON RES	
	R538	QRD161J-102	1K	1/6W	CARBON RES	
	R539	QRD161J-222	2.2K	1/6W	CARBON RES	
	R540	QRD161J-473	47K	1/6W	CARBON RES	
	R541	QRD161J-473	47K	1/6W	CARBON RES	
	R542	EGB4050127255			CARBON RES	
	R543	EGB4050127255			CARBON RES	
	R548	QRD167J-223	22K	1/6W	CARBON RES	
	R549	QRD167J-223	22K	1/6W	CARBON RES	
	R550	QRD161J-183	18K	1/6W	CARBON RES	
	R551	QRD161J-183	18K	1/6W	CARBON RES	
	R552	QRD167J-223	22K	1/6W	CARBON RES	
	R553	QRD167J-223	22K	1/6W	CARBON RES	
	R554	QRD161J-183	18K	1/6W	CARBON RES	
	R555	QRD161J-183	18K	1/6W	CARBON RES	
	R556	QRD161J-123	12K	1/6W	CARBON RES	
	R557	QRD161J-123	12K	1/6W	CARBON RES	
	R558	QRD161J-183	18K	1/6W	CARBON RES	
	R559	QRD161J-183	18K	1/6W	CARBON RES	
	R560	QRD161J-103	10K	1/6W	CARBON RES	
	R561	QRD161J-103	10K	1/6W	CARBON RES	
	R562	QRD161J-103	10K	1/6W	CARBON RES	
	R563	QRD161J-103	10K	1/6W	CARBON RES	
	R564	QRD167J-562	5.6K	1/6W	CARBON RES	
	R565	QRD161J-102	1K	1/6W	CARBON RES	
	R566	QRD161J-103	10K	1/6W	CARBON RES	
	R567	QRD167J-221	220	1/6W	CARBON RES	
	R568	QRD161J-103	10K	1/6W	CARBON RES	
	R569	QRD161J-103	10K	1/6W	CARBON RES	
	R570	QRD161J-102	1K	1/6W	CARBON RES	
	R572	QRD141J-471S	470	1/4W	CARBON RES	
	R573	QRD141J-471S	470	1/4W	CARBON RES	
	R575	QRD161J-102	1K	1/6W	CARBON RES	
	R576	QRD161J-102	1K	1/6W	CARBON RES	
	R577	QRD161J-104	100K	1/6W	CARBON RES	
	R578	QRD161J-104	100K	1/6W	CARBON RES	
	R579	QRD161J-393	39K	1/6W	CARBON RES	
	R580	QRD161J-393	39K	1/6W	CARBON RES	
	R581	QRD161J-683	68K	1/6W	CARBON RES	
	R582	QRD161J-683	68K	1/6W	CARBON RES	
	R583	QRD161J-124	120K	1/6W	CARBON RES	
	R584	QRD161J-124	120K	1/6W	CARBON RES	
	R585	QRD161J-102	1K	1/6W	CARBON RES	
	R586	QRD161J-102	1K	1/6W	CARBON RES	
	R587	QRD161J-473	47K	1/6W	CARBON RES	
	R588	QRD161J-473	47K	1/6W	CARBON RES	
	R589	QRD167J-113	11K	1/6W	CARBON RES	
	R590	QRD167J-113	11K	1/6W	CARBON RES	
	R591	QRD161J-102	1K	1/6W	CARBON RES	
	R592	QRD161J-102	1K	1/6W	CARBON RES	
	R593	QRD161J-473	47K	1/6W	CARBON RES	
	R594	QRD161J-473	47K	1/6W	CARBON RES	
	R595	QRD161J-473	47K	1/6W	CARBON RES	
	R596	QRD161J-473	47K	1/6W	CARBON RES	
	R597	QRD161J-104	100K	1/6W	CARBON RES	
	R598	QRD161J-104	100K	1/6W	CARBON RES	
	R599	QRD161J-104	100K	1/6W	CARBON RES	
	R600	QRD161J-104	100K	1/6W	CARBON RES	
	R610	QRD161J-104	100K	1/6W	CARBON RES	
⚠	R617	QRD125J-391	390	1/2W	UNF.CARBON	
⚠	R618	QRD125J-391	390	1/2W	UNF.CARBON	
	R619	QRD161J-473	47K	1/6W	CARBON RES	
	R620	QRD161J-473	47K	1/6W	CARBON RES	
	R623	EGB4050215554			CARBON RES	
	R624	EGB4050215554			CARBON RES	
	R626	QRD161J-103	10K	1/6W	CARBON RES	
	R627	QRD161J-103	10K	1/6W	CARBON RES	
	R628	QRD161J-103	10K	1/6W	CARBON RES	

RESISTORS

⚠	ITEM	PART NUMBER	DESCRIPTION			AREA
	R629	QRD161J-103	10K	1/6W	CARBON RES	
	R630	QRD161J-105	1M	1/6W	CARBON RES	
	R631	QRD161J-105	1M	1/6W	CARBON RES	
	R632	QRD161J-102	1K	1/6W	CARBON RES	
	R633	QRD161J-102	1K	1/6W	CARBON RES	
	R634	QRD167J-223	22K	1/6W	CARBON RES	
	R635	QRD167J-223	22K	1/6W	CARBON RES	
	R636	QRD167J-223	22K	1/6W	CARBON RES	
	R637	QRD167J-223	22K	1/6W	CARBON RES	
	R638	QRD161J-102	1K	1/6W	CARBON RES	
	R639	QRD161J-102	1K	1/6W	CARBON RES	
	R640	QRD148J-152S	1.5K	1/4W	CARBON	
	R641	QRD148J-152S	1.5K	1/4W	CARBON	
	R642	QRD161J-102	1K	1/6W	CARBON RES	
	R643	QRD161J-102	1K	1/6W	CARBON RES	
	R646	QRD161J-224	220K	1/6W	CARBON RES	
	R647	QRD161J-563	56K	1/6W	CARBON RES	
	R648	QRD161J-563	56K	1/6W	CARBON RES	
	R649	QRD161J-103	10K	1/6W	CARBON RES	
	R650	QRD161J-103	10K	1/6W	CARBON RES	
	R651	QRD167J-153	15K	1/6W	CARBON RES	
	R652	QRD167J-153	15K	1/6W	CARBON RES	
	R653	QRD161J-561	560	1/6W	CARBON RES	
	R654	QRD161J-561	560	1/6W	CARBON RES	
	R657	EGB4270210055			METAL FILM	
	R678	QRD161J-104	100K	1/6W	CARBON RES	
	R679	QRD161J-104	100K	1/6W	CARBON RES	
	R680	EGB4271010955			METAL FILM	
	R681	QRD161J-333	33K	1/6W	CARBON RES	
	R682	QRD161J-333	33K	1/6W	CARBON RES	
	RA301	EGB5226103177			TRIMMER RE	
	RA302	EGB5226103177			TRIMMER RE	
	RA303	EGB5226103177			TRIMMER RE	
	RA304	EGB5226103177			TRIMMER RE	
	RA305	EGB5226503177			TRIMMER RE	
	RA306	EGB5226503177			TRIMMER RE	
	RA307	EGB5226104177			TRIMMER RE	
	RA308	EGB5226104177			TRIMMER RE	

OTHERS

⚠	ITEM	PART NUMBER	DESCRIPTION	AREA
		EGBC488021718	CONNECTING	
		EGBC488021721	CONNECTING	
		EGBC488021722	CONNECTING	
		EGBC488031719	CONNECTING	
		EGBC488051742	CONNECTING	
		EGBC488081724	CONNECTING	
		EGB2000000478	TERMINAL PI	
		EGB420C664242	POWER TRANS	BS
		EGB420C664242	POWER TRANS	EF
		EGB420C664242	POWER TRANS	EN
		EGB420C664242	POWER TRANS	G
		EGB420C664242	POWER TRANS	GI
		EGB420C664242	POWER TRANS	VX
		EGB420C769126	POWER TRANS	US
		EGB4400000138	LEAF SWITCH	
		EGB4490500261	WIRE HOLDER	
		EGB4580000021	CORD STOPPE	
		EGB4590080243	EARTH TERMI	
		EGB463137L065	POWER CORD	
		EGB4692000034	FUSE HOLDER	
		EGB5280020010	TUBE	
		EGB8611200500	SCREW	
		EGB8661200500	SCREW	
		EGB9030006290	CAUTION LAB	
⚠		QMF51U1-2R5	FUSE	US
⚠	F501	QMF51U1-1R0S	FUSE	BS
⚠	F501	QMF51U1-1R0S	FUSE	EF
⚠	F501	QMF51U1-1R0S	FUSE	EN
⚠	F501	QMF51U1-1R0S	FUSE	G
⚠	F501	QMF51U1-1R0S	FUSE	GI
⚠	F501	QMF51U1-1R0S	FUSE	VX
⚠	F502	QMF51U1-4R0S	FUSE	
⚠	F503	QMF51U1-2R5	FUSE	
	L301	EGB416133B261	TRAP COIL	
	L302	EGB416133B261	TRAP COIL	
	L303	EGB4360400720	TRAP COIL	
	L304	EGB4360400720	TRAP COIL	
	L305	EGB4360400740	TRAP COIL	
	L306	EGB4360400740	TRAP COIL	
	L307	EGB4329247211	INDUCTOR	
	L308	EGB4329247211	INDUCTOR	
	L309	EGB4329268211	INDUCTOR	
	L310	EGB4329268211	INDUCTOR	
	L311	EGB4330801910	OSCILLATOR	
	L312	EGB4328247186	CHOKE COIL	
	P001	EGB2000000843	PIN	
	P002	EGB2000000843	PIN	
	S301	EGB4430202685	PUSH SWITCH	
	CN301	EGB4490301004	CONNECT TER	
	CN302	EMV5109-005A	MALE CONNEC	
	CN303	EGB4490201004	CONNECT TER	
	CN304	EGB4490201004	CONNECT TER	
	CN305	EGB4490500261	WIRE HOLDER	
	CN305	EGB4490500270	CONNECT TER	
	CN306	EGB4490801004	CONNECT TER	
	CN307	EGB4490201004	CONNECT TER	
	CN308	EGB4490300297	CONNECT TER	
	CN501	EGB4493200263	CONNECT TER	
	CN502	EGB4491001004	CONNECT TER	
	CN503	EGB4491200296	CONNECT TER	
	CN504	EGB4490800270	CONNECT TER	
	CN505	EGB4490500261	WIRE HOLDER	
	CN506	EGB4490500261	WIRE HOLDER	
	CN507	EGBC488081533	CONNECT TER	
	CN508	EGB4490801004	CONNECT TER	
	CP501	EGB4159ICPN38	I.C.PROTECT	
	CP502	EGB4159ICPN38	I.C.PROTECT	
	FR503	EGB4180482057	FUSIBLE RES	
	FR504	EGB4180482057	FUSIBLE RES	
	GN001	EGB2005079551	EARTH TERMI	
	GN003	EGB2005079551	EARTH TERMI	
	JK501	EGB4560004076	SPEAKER TER	
	JK502	EGB4500800420	RCA JACK	
	JK504	EGB4500500260	HEADPHONE J	
	RY501	EGB4390000057	RELAY	
	TP001	EGB4490200297	CONNECT TER	
	TP002	EGB4490200297	CONNECT TER	
		EGB4144242710	PRINTED BOA	

■ Front P.C. Board Ass'y

Block No. 0 2

TRANSISTORS

⚠	ITEM	PART NUMBER	DESCRIPTION	AREA
	Q702	2SC945	SI.TRANSIST NEC	
	Q703	2SC945	SI.TRANSIST NEC	
	Q704	2SC945	SI.TRANSIST NEC	
	Q705	2SC945	SI.TRANSIST NEC	

I. C. S.

⚠	ITEM	PART NUMBER	DESCRIPTION	AREA
	IC102	EGB7140924438	I.C.	
	IC701	EGB4152C72322	I.C(M) 8103	
	IC702	LB1641	I.C(DIGI-OT SANYO	
	IC703	EGB4159061240	I.C(MONO-AN 8103	
	IC704	EGB4159061240	I.C(MONO-AN 8103	

DIODES

⚠	ITEM	PART NUMBER	DESCRIPTION	AREA
	D701	EGB4121625413	L.E.D. 8103	
	D702	EGB4121625413	L.E.D. 8103	
	D703	EGB4121625413	L.E.D. 8103	
	D704	EGB4121625413	L.E.D. 8103	
	D705	EGB4121625413	L.E.D. 8103	
	D706	EGB4121625413	L.E.D. 8103	
	D707	EGB4120602042	L.E.D. 8103	
	D708	EGB4121625413	L.E.D. 8103	
	D709	EGB4121625413	L.E.D. 8103	
	D711	EGB41216254Y3	L.E.D. 8103	
	D712	EGB41216254Y3	L.E.D. 8103	
	D713	EGB41216254Y3	L.E.D. 8103	
	D714	EGB41216254Y3	L.E.D. 8103	
	D715	EGB41216254Y3	L.E.D. 8103	
	D716	EGB41216254Y3	L.E.D. 8103	
	D717	EGB41216254Y3	L.E.D. 8103	
	D718	EGB41216254Y3	L.E.D. 8103	
	D719	EGB41216254Y3	L.E.D. 8103	
	D720	EGB41216254Y3	L.E.D. 8103	
	D721	1SS176-A7	SI.DIODE 6997	
	D722	1SS176-A7	SI.DIODE 6997	
	D723	1SS176-A7	SI.DIODE 6997	
	D724	1SS176-A7	SI.DIODE 6997	
	D725	1SS176-A7	SI.DIODE 6997	
	D726	1SS176-A7	SI.DIODE 6997	
	D727	1SS176-A7	SI.DIODE 6997	
	D728	1SS176-A7	SI.DIODE 6997	
	D729	1SS176-A7	SI.DIODE 6997	
	D731	1SS176-A7	SI.DIODE 6997	
	D732	1SS176-A7	SI.DIODE 6997	
	D733	1SS176-A7	SI.DIODE 6997	
	D734	1SS176-A7	SI.DIODE 6997	
	D737	1SS176-A7	SI.DIODE 6997	
	D738	1SS176-A7	SI.DIODE 6997	
	D739	1SS176-A7	SI.DIODE 6997	
	D740	1SS176-A7	SI.DIODE 6997	
	D741	1SS176-A7	SI.DIODE 6997	
	D742	EGB412152047J	ZENER DIODE 8103	

CAPACITORS

⚠	ITEM	PART NUMBER	DESCRIPTION	AREA
	C701	QETB0JM-108N	1000MF 6.3V E.CAPACITO	
	C702	QFN81HK-104	0.1MF 50V METAL.MYLA	
	C703	QCHB1EZ-223	0.022MF 25V CER.CAPACI	
	C704	QCSB1HJ-300	30PF 50V CERAMIC	
	C705	QCSB1HJ-300	30PF 50V CERAMIC	
	C706	QFN81HK-104	0.1MF 50V METAL.MYLA	
	C707	QCGB1HK-102	1000PF 50V CER.CAPACI	
	C708	QCGB1HK-102	1000PF 50V CER.CAPACI	
	C709	QCGB1HK-102	1000PF 50V CER.CAPACI	
	C710	QCGB1HK-102	1000PF 50V CER.CAPACI	
	C711	QCBB1HK-101Y	100PF 50V CER.CAPACI	
	C712	QCBB1HK-101Y	100PF 50V CER.CAPACI	
	C713	QCBB1HK-101Y	100PF 50V CER.CAPACI	
	C714	QCBB1HK-101Y	100PF 50V CER.CAPACI	
	C715	QFN81HK-104	0.1MF 50V METAL.MYLA	
	C716	QETB1CM-476	47MF 16V AL E.CAPAC	
	C717	QFN81HK-104	0.1MF 50V METAL.MYLA	
	C718	QETB1CM-476	47MF 16V AL E.CAPAC	
	C719	QETB1EM-106	10MF 25V AL E.CAPAC	
	C720	QETB1EM-106	10MF 25V AL E.CAPAC	
	C721	QCGB1HK-102	1000PF 50V CER.CAPACI	
	C722	QCHB1EZ-223	0.022MF 25V CER.CAPACI	
	C727	QCBB1HK-101Y	100PF 50V CER.CAPACI	
	C728	EGB7306610445	CER.CAPACI	
	C732	QCSB1HK-100Y	1000PF 50V CER.CAPACI	
	C733	QCSB1HJ-100Y	10PF 50V CER.CAPACI	
	C734	QCSB1HJ-100Y	10PF 50V CERAMIC	BS
	C734	QCSB1HJ-100Y	10PF 50V CERAMIC	VX
	C734	QCSB1HK-100Y	1000PF 50V CERAMIC	EF
	C734	QCSB1HK-100Y	1000PF 50V CERAMIC	EN
	C734	QCSB1HK-100Y	1000PF 50V CERAMIC	G
	C734	QCGB1HK-102	1000PF 50V CERAMIC	GI
	C734	QCGB1HK-102	1000PF 50V CERAMIC	US

RESISTORS

⚠	ITEM	PART NUMBER	DESCRIPTION	AREA
	R701	QRD161J-332YTT	3.3K 1/6W CARBON RES	
	R702	QRD161J-332YTT	3.3K 1/6W CARBON RES	
	R703	QRD161J-473	47K 1/6W CARBON RES	
	R704	QRD161J-473	47K 1/6W CARBON RES	
	R705	QRD161J-473	47K 1/6W CARBON RES	
	R706	QRD161J-103	10K 1/6W CARBON RES	
	R707	QRD161J-473	47K 1/6W CARBON RES	
	R708	QRD161J-473	47K 1/6W CARBON RES	
	R709	QRD161J-473	47K 1/6W CARBON RES	
	R710	QRD161J-473	47K 1/6W CARBON RES	
	R712	QRD161J-472	4.7K 1/6W CARBON RES	
	R713	QRD161J-472	4.7K 1/6W CARBON RES	
	R714	QRD161J-472	4.7K 1/6W CARBON RES	
	R715	QRD161J-102	1K 1/6W CARBON RES	
	R716	QRD161J-102	1K 1/6W CARBON RES	
	R717	QRD161J-102	1K 1/6W CARBON RES	
	R718	QRD161J-473	47K 1/6W CARBON RES	
	R719	QRD161J-473	47K 1/6W CARBON RES	
	R720	QRD161J-473	47K 1/6W CARBON RES	
	R721	QRD161J-473	47K 1/6W CARBON RES	
	R722	QRD161J-103	10K 1/6W CARBON RES	
	R723	QRD161J-473	47K 1/6W CARBON RES	
	R724	QRD161J-471	470 1/6W CARBON RES	
	R725	QRD161J-471	470 1/6W CARBON RES	
	R726	QRD161J-102	1K 1/6W CARBON RES	
	R727	QRD161J-472	4.7K 1/6W CARBON RES	
	R731	QRD161J-102	1K 1/6W CARBON RES	
	R732	QRD161J-102	1K 1/6W CARBON RES	
	R733	QRD161J-102	1K 1/6W CARBON RES	
	R734	QRD161J-102	1K 1/6W CARBON RES	
	R735	QRD161J-102	1K 1/6W CARBON RES	
	R736	QRD161J-102	1K 1/6W CARBON RES	
	R737	QRD161J-102	1K 1/6W CARBON RES	
	R738	QRD161J-102	1K 1/6W CARBON RES	
	R739	QRD161J-102	1K 1/6W CARBON RES	
	R740	QRD161J-102	1K 1/6W CARBON RES	
	R741	QRD161J-103	10K 1/6W CARBON RES	
	R742	QRD161J-103	10K 1/6W CARBON RES	
	R743	QRD161J-102	1K 1/6W CARBON RES	
	R747	QRD167J-824	820K 1/6W CARBON	
	R748	QRD161J-103	10K 1/6W CARBON RES	
⚠	R750	QRD14CJ-220S	22 1/4W UNF.CARBON	
	VR701	EGB5025215238	VARIABLE R	

OTHERS

⚠	ITEM	PART NUMBER	DESCRIPTION	AREA
		EGB4142242810	PRINTED BOA	
		EGB4590160105	EARTH TERMI	
		EGB4590220105	EARTH TERMI	
	S701	EGB4400000156	TACT SWITCH	
	S702	EGB4400000156	TACT SWITCH	
	S703	EGB4400000156	TACT SWITCH	
	S704	EGB4400000156	TACT SWITCH	
	S705	EGB4400000156	TACT SWITCH	
	S706	EGB4400000156	TACT SWITCH	
	S707	EGB4400000156	TACT SWITCH	
	S708	EGB4400000156	TACT SWITCH	
	S709	EGB4400000156	TACT SWITCH	
	S710	EGB4400000156	TACT SWITCH	
	S711	EGB4400000156	TACT SWITCH	
	S712	EGB4400000156	TACT SWITCH	
	S713	EGB4400000156	TACT SWITCH	
	S714	EGB4400000156	TACT SWITCH	
	S715	EGB4400000156	TACT SWITCH	
	S716	EGB4400000156	TACT SWITCH	
	S717	EGB4400000156	TACT SWITCH	
	S718	EGB4400000156	TACT SWITCH	
	S719	EGB4400000156	TACT SWITCH	
	S720	EGB4400000156	TACT SWITCH	
	S721	EGB4400000156	TACT SWITCH	
	S722	EGB4400000156	TACT SWITCH	
	S723	EGB4400000156	TACT SWITCH	
	S724	EGB4400000156	TACT SWITCH	
	S725	EGB4400000156	TACT SWITCH	
	S726	EGB4400000156	TACT SWITCH	
	U701	EGB4110430217	FLUORESCENT	
	X701	EGB4100904 50M	CRYSTAL	
	CN701	EGB4493200265	CONNECT TER	
	CN702	EGB4490800261	CONNECT TER	
	CN704	EGBC488021717	CONNECT TER	
	FR728	EGB4180210057	FUSIBLE RES	
	LP701	EGB4700140029	BACK LAMP	
	LP702	EGB4700140029	BACK LAMP	

■ CD Decoder P.C. Board Ass'y

Block No. 0 3

TRANSISTORS

⚠	ITEM	PART NUMBER	DESCRIPTION	AREA
	Q001	2SA952(L,K)	SI.TRANSIST NEC	
	Q002	2SA952(L,K)	SI.TRANSIST NEC	
	Q003	2SA952(L,K)	SI.TRANSIST NEC	
	Q004	2SA952(L,K)	SI.TRANSIST NEC	
	Q005	2SC2001(L,K)	SI.TRANSIST	
	Q006	2SA733Q	SILICON	
	Q007	2SC945	SI.TRANSIST NEC	
	Q009	2SC945	SI.TRANSIST NEC	
	Q010	2SC2060(Q,R)	SI.TRANSIST ROHM	
	Q011	2SC2060(Q,R)	SI.TRANSIST ROHM	
	Q012	2SC2001(L,K)	SI.TRANSIST	
	Q013	2SC945	SI.TRANSIST NEC	
	Q014	2SA733Q	SILICON	
	Q015	2SC945	SI.TRANSIST NEC	
	Q016	2SC945	SI.TRANSIST NEC	

I. C. S.

⚠	ITEM	PART NUMBER	DESCRIPTION	AREA
	IC001	CXA1782AQ	I.C(MONO-AN 8126	
	IC003	EGB415112GF04	I.C(DIGI-MO 8103	
	IC004	EGB415C02508Q	I.C(DIGI-MO 8103	
	IC005	BA6398FP	I.C(MONO-AN ROHM	
	IC006	NJM4558L	I.C(MONO-AN DAINICHI	
	IC007	NJM4558L	I.C(MONO-AN DAINICHI	
	IC103	EGB415112GF13	I.C(DIGI-MO 8103	

DIODES

⚠	ITEM	PART NUMBER	DESCRIPTION	AREA
	D001	1SS176-A7	SI.DIODE 6997	
	D002	1SS176-A7	SI.DIODE 6997	
	D003	EGB412151051J	ZENER DIODE 8103	
	D004	1SS176-A7	SI.DIODE 6997	
	D005	EGB4138104002	SI.DIODE 8103	
	D006	EGB4138104002	SI.DIODE 8103	
	D007	EGB4138104002	SI.DIODE 8103	
	D008	EGB4138104002	SI.DIODE 8103	
	D009	EGB412152100J	ZENER DIODE 8103	
	D010	EGB412152056J	ZENER DIODE 8103	
	D011	1SS176-A7	SI.DIODE 6997	
	D012	1SS176-A7	SI.DIODE 6997	
	D013	EGB412151051J	ZENER DIODE 8103	
	D015	1SS176-A7	SI.DIODE 6997	
	D017	EGB41200EL7LD	DIODE 8103	

CAPACITORS

⚠	ITEM	PART NUMBER	DESCRIPTION	AREA
	C001	QCXB1CM-472Y	4700PF 16V CER.CAPACI	
	C002	QETB1EM-107	100MF 25V AL E.CAPAC	
	C003	QETB1EM-107	100MF 25V AL E.CAPAC	
	C004	QCVB1CM-103Y	0.01MF 16V CER.CAPACI	
	C005	EGB5116153550	0.015MF 50V MYLAR CAPA	
	C006	QCVB1CM-103Y	0.01MF 16V CER.CAPACI	
	C007	QFN81HJ-333	0.033MF 50V MYLAR CAPA	
	C008	QCXB1CM-472Y	4700PF 16V CER.CAPACI	
	C009	QFN81HK-104	0.1MF 50V METAL.MYLA	
	C010	QCVB1CM-103Y	0.01MF 16V CER.CAPACI	
	C011	QFN81HK-104	0.1MF 50V METAL.MYLA	
	C012	QCVB1CM-103Y	0.01MF 16V CER.CAPACI	
	C013	QFN81HK-104	0.1MF 50V METAL.MYLA	
	C014	QCXB1CM-222Y	2200PF 16V CER.CAPACI	
	C015	QFN81HK-104	0.1MF 50V METAL.MYLA	
	C016	QFN81HK-104	0.1MF 50V METAL.MYLA	
	C017	QFN81HJ-333	0.033MF 50V MYLAR CAPA	
	C018	QFN81HK-104	0.1MF 50V METAL.MYLA	
	C019	QETC1HM-475E	4.7MF 50V ELECTRO	
	C020	QCVB1CM-103Y	0.01MF 16V CER.CAPACI	
	C021	QFN81HJ-104	0.1MF 50V METAL.MYLA	
	C022	EGB5153471210	470MF 10V AL E.CAPAC	
	C023	QFN81HK-104	0.1MF 50V METAL.MYLA	
	C024	QETB1EM-226N	22MF 25V E.CAPACITO	
	C025	QETB1HM-336	33MF 50V AL E.CAPAC	
	C027	QCVB1CM-103Y	0.01MF 16V CER.CAPACI	
	C028	QFN81HK-104	0.1MF 50V METAL.MYLA	
	C029	QETB1EM-107	100MF 25V AL E.CAPAC	
	C030	QETB1EM-107	100MF 25V AL E.CAPAC	
	C031	QFN81HK-473	0.047MF 50V METAL.MYLA	
	C032	QFN81HK-104	0.1MF 50V METAL.MYLA	
	C033	QCXB1CM-152Y	1500PF 16V CER.CAPACI	
	C034	QFN81HK-104	0.1MF 50V METAL.MYLA	
	C035	QFN81HJ-223	0.022MF 50V METAL.MYLA	
	C036	QCVB1CM-103Y	0.01MF 16V CER.CAPACI	
	C037	QCBB1HK-221Y	220PF 50V CER.CAPACI	
	C041	QETC1HM-475E	4.7MF 50V ELECTRO	
	C042	QCVB1CM-103Y	0.01MF 16V CER.CAPACI	
	C043	QCGB1HK-102	1000PF 50V CER.CAPACI	
	C044	QETB1EM-106	10MF 25V AL E.CAPAC	
	C045	QFN81HK-104	0.1MF 50V METAL.MYLA	
	C046	QETB1HM-105	1MF 50V AL E.CAPAC	
	C047	QFN81HK-104	0.1MF 50V METAL.MYLA	
	C053	QETB1EM-107	100MF 25V AL E.CAPAC	
	C054	QETB1CM-107	100MF 16V AL E.CAPAC	
	C055	QETB1CM-477M	470MF 16V E.CAPACITO	
	C056	QETB1CM-228	2200MF 16V AL E.CAPAC	
	C057	QCHB1EZ-223	0.022MF 25V CER.CAPACI	
	C058	QCHB1EZ-223	0.022MF 25V CER.CAPACI	
	C059	EGB5158471216	470MF 16V AL E.CAPAC	
	C060	EGB5153471210	470MF 10V AL E.CAPAC	
	C061	QETB1EM-107	100MF 25V AL E.CAPAC	
	C062	EGB5165109250	1MF 10V E.CAPACITO	
	C063	QCHB1EZ-223	0.022MF 25V CER.CAPACI	
	C064	QCGB1HK-102	1000PF 50V CER.CAPACI	

CAPACITORS

⚠	ITEM	PART NUMBER	DESCRIPTION	AREA
	C065	QCBB1HK-101Y	100PF 50V CERAMIC	
	C066	QFN81HK-104	0.1MF 50V METAL.MYLA	
	C068	QCGB1HK-102	1000PF 50V CER.CAPACI	
	C069	QCSB1HJ-240	24PF 50V CERAMIC	
	C070	QCSB1HJ-220	22PF 50V CER.CAPACI	
	C071	QCBB1HK-151	150PF 50V CER.CAPACI	
	C073	QFN81HK-104	0.1MF 50V METAL.MYLA	
	C074	QCSB1HJ-470	47PF 50V CER.CAPACI	
	C075	QCSB1HJ-470	47PF 50V CER.CAPACI	
	C076	QCXB1CM-272	2700PF 16V CERAMIC	
	C077	QFPB2AJ-471	470PF 100V POLYPROPY.	
	C078	QCVB1CM-822Y	8200PF 16V CER.CAPACI	
	C079	QETB1HM-225	2.2MF 50V AL E.CAPAC	
	C0071	QCBB1HK-151	150PF 50V CER.CAPACI	
	C0074	QCSB1HJ-470	47PF 50V CER.CAPACI	
	C0075	QCSB1HJ-470	47PF 50V CER.CAPACI	
	C0076	QCXB1CM-272	2700PF 16V CERAMIC	
	C0077	QFPB2AJ-471	470PF 100V POLYPROPY.	
	C0078	QCVB1CM-822Y	8200PF 16V CER.CAPACI	
	C0079	QETB1HM-225	2.2MF 50V AL E.CAPAC	

RESISTORS

⚠	ITEM	PART NUMBER	DESCRIPTION	AREA
	R001	QRD161J-123	12K 1/6W CARBON RES	
	R002	QRD161J-123	12K 1/6W CARBON RES	
	R003	QRD161J-100	10 1/6W CARBON RES	
	R004	QRD161J-102	1K 1/6W CARBON RES	
	R006	QRD161J-472	4.7K 1/6W CARBON RES	
	R007	QRD167J-153	15K 1/6W CARBON RES	
	R008	QRD167J-153	15K 1/6W CARBON RES	
	R009	QRD167J-153	15K 1/6W CARBON RES	
	R010	QRD161J-393	39K 1/6W CARBON RES	
	R011	QRD161J-684	680K 1/6W CARBON RES	
	R012	QRD161J-563	56K 1/6W CARBON RES	
	R013	QRD167J-514	510K 1/6W CARBON RES	
	R014	QRD167J-154	150K 1/6W CARBON RES	
	R015	QRD161J-563	56K 1/6W CARBON RES	
	R016	QRD161J-124	120K 1/6W CARBON RES	
	R017	QRD161J-104	100K 1/6W CARBON RES	
	R018	QRD167J-273	27K 1/6W CARBON	
	R019	QRD167J-153	15K 1/6W CARBON RES	
	R020	QRD161J-101	100 1/6W CARBON RES	
	R021	QRD167J-223	22K 1/6W CARBON RES	
	R022	QRD161J-473	47K 1/6W CARBON RES	
	R023	QRD161J-224	220K 1/6W CARBON RES	
	R024	QRD167J-154	150K 1/6W CARBON RES	
	R025	QRD161J-104	100K 1/6W CARBON RES	
	R026	QRD161J-103	10K 1/6W CARBON RES	
	R027	QRD161J-473	47K 1/6W CARBON RES	
	R028	QRD161J-103	10K 1/6W CARBON RES	
	R029	QRD167J-151	150 1/6W CARBON RES	
	R030	QRD167J-223	22K 1/6W CARBON RES	
	R031	QRD161J-472	4.7K 1/6W CARBON RES	
	R032	QRD161J-472	4.7K 1/6W CARBON RES	
	R033	QRD161J-472	4.7K 1/6W CARBON RES	
	R034	QRD161J-103	10K 1/6W CARBON RES	
	R035	QRD161J-222	2.2K 1/6W CARBON RES	
	R036	QRD161J-100	10 1/6W CARBON RES	
	R037	QRD161J-105	1M 1/6W CARBON RES	
	R038	QRD161J-103	10K 1/6W CARBON RES	
	R039	QRD161J-332YTT	3.3K 1/6W CARBON RES	
	R040	QRD161J-332YTT	3.3K 1/6W CARBON RES	
	R041	QRD161J-103	10K 1/6W CARBON RES	
	R042	QRD161J-104	100K 1/6W CARBON RES	
	R043	QRD161J-103	10K 1/6W CARBON RES	
	R044	QRD148J-103S	10K 1/4W CARBON	
	R045	QRD161J-104	100K 1/6W CARBON RES	
	R046	QRD161J-103	10K 1/6W CARBON RES	
	R047	QRD161J-103	10K 1/6W CARBON RES	
	R048	QRD161J-103	10K 1/6W CARBON RES	
	R049	QRD161J-103	10K 1/6W CARBON RES	
	R050	QRD167J-223	22K 1/6W CARBON RES	
	R051	QRD167J-223	22K 1/6W CARBON RES	
	R052	QRD167J-223	22K 1/6W CARBON RES	
	R053	QRD167J-223	22K 1/6W CARBON RES	
	R054	QRD167J-223	22K 1/6W CARBON RES	
	R055	QRD167J-223	22K 1/6W CARBON RES	
	R056	QRD161J-103	10K 1/6W CARBON RES	

RESISTORS

⚠	ITEM	PART NUMBER	DESCRIPTION	AREA
	R057	QRD161J-821	820 1/6W CARBON RES	
	R058	QRD161J-821	820 1/6W CARBON RES	
	R061	QRD167J-223	22K 1/6W CARBON RES	
	R062	QRD167J-223	22K 1/6W CARBON RES	
	R063	QRD167J-223	22K 1/6W CARBON RES	
	R064	QRD167J-223	22K 1/6W CARBON RES	
⚠	R065	QRD14CJ-220S	22 1/4W UNF.CARBON	
	R066	QRD167J-223	22K 1/6W CARBON RES	
	R067	EGB4171018155	OXIDE META	
	R068	EGB4271015155	METAL FILM	
	R069	QRD148J-102	1K 1/4W CARBON	
	R070	QRD161J-222	2.2K 1/6W CARBON RES	
	R071	QRD161J-222	2.2K 1/6W CARBON RES	
	R072	QRD161J-222	2.2K 1/6W CARBON RES	
	R073	QRD161J-473	47K 1/6W CARBON RES	
	R074	QRD167J-153	15K 1/6W CARBON RES	
	R075	QRD161J-103	10K 1/6W CARBON RES	
	R076	QRD167J-511	510 1/6W CARBON RES	
	R077	QRD161J-105	1M 1/6W CARBON RES	
	R078	QRD161J-103	10K 1/6W CARBON RES	
	R079	QRD161J-103	10K 1/6W CARBON RES	
	R080	QRD161J-333	33K 1/6W CARBON RES	
	R081	QRD161J-333	33K 1/6W CARBON RES	
	R082	QRD161J-473	47K 1/6W CARBON RES	
	R083	QRD161J-473	47K 1/6W CARBON RES	
	R084	QRD161J-222	2.2K 1/6W CARBON RES	
	R085	QRD161J-222	2.2K 1/6W CARBON RES	
	R086	QRD161J-222	2.2K 1/6W CARBON RES	
	R087	QRD167J-223	22K 1/6W CARBON RES	
	R088	QRD161J-472	4.7K 1/6W CARBON RES	
	R089	QRD161J-102	1K 1/6W CARBON RES	
	R090	QRD161J-104	100K 1/6W CARBON RES	
	R091	QRD161J-104	100K 1/6W CARBON RES	
	R092	QRD161J-103	10K 1/6W CARBON RES	
	R095	QRD161J-470	47 1/6W CARBON RES	
	R096	QRD161J-470	47 1/6W CARBON RES	
	R0078	QRD161J-103	10K 1/6W CARBON RES	
	R0079	QRD161J-103	10K 1/6W CARBON RES	
	R0080	QRD161J-333	33K 1/6W CARBON RES	
	R0081	QRD161J-333	33K 1/6W CARBON RES	
	R0082	QRD161J-473	47K 1/6W CARBON RES	
	R0083	QRD161J-473	47K 1/6W CARBON RES	
	R0084	QRD161J-222	2.2K 1/6W CARBON RES	
	R0085	QRD161J-222	2.2K 1/6W CARBON RES	
	R0086	QRD161J-222	2.2K 1/6W CARBON RES	
	R0087	QRD167J-223	22K 1/6W CARBON RES	
	R0088	QRD161J-472	4.7K 1/6W CARBON RES	
	R0089	QRD161J-102	1K 1/6W CARBON RES	
	VR001	EGB5226503177	TRIMMER RE	

OTHERS

⚠	ITEM	PART NUMBER	DESCRIPTION	AREA
		EGBC48Q064011	CONNECT TER 6PIN (CN003)	
		EGBC488020491	CONNECT TER 2PIN (CN006)	
		EGBC488030490	CONNECT TER 3PIN (CN005)	
		EGBC488040583	CONNECT TER 4PIN (CN007)	
		EGBC488051413	CONNECT TER 5PIN (CN001)	
		EGBC488081697	CONNECT TER 8PIN (CN002)	
		EGB414A242210	PRINTED BOA	
		EGB4590200272	EARTH TERMI	
		EGB5410320040	FLAT WIRE A	
	L001	EGB4325010093	COIL	
	L003	EGB4325010093	COIL	
	L004	EGB4325012993	COIL	
	S001	EGB4400000156	TACT SWITCH	
	S002	EGB4400000156	TACT SWITCH	
	S003	EGB4400000156	TACT SWITCH	
	S004	EGB4400000156	TACT SWITCH	
	S006	EGB4400000156	TACT SWITCH	
	S007	EGB4400000156	TACT SWITCH	
	S008	EGB4400000156	TACT SWITCH	
	S009	EGB4400000156	TACT SWITCH	
	S010	EGB4400000156	TACT SWITCH	
	S011	EGB4400000156	TACT SWITCH	
	S012	EGB4400000156	TACT SWITCH	
	S013	EGB4400000156	TACT SWITCH	
	S014	EGB4400000156	TACT SWITCH	
	S015	EGB4400000156	TACT SWITCH	
	U001	EGB4110440193	L.CRYSTAL D	
	CF001	CST4.00MGW		
	CN001	EMV5109-005A	PLUG WIRE ASSY	
	CN002	EGB4490801004	PLUG WIRE ASSY	
	CN003	EMV5109-006A	PLUG WIRE ASSY	
	CN004	EGB4490300261	WIRE HOLDER	
	CN005	EGB4490301003	PLUG WIRE ASSY	
	CN006	EGB4490201003	PLUG WIRE ASSY	
	CN007	EGB4490401003	PLUG WIRE ASSY	
	CN008	EGBC488101562	PLUG WIRE ASSY	
	CN009	EGB4490800261	CONNECT TER	
	CN010	EGB4490200261	WIRE HOLDER	
	CN015	EGB4490200297	CONNECT TER	
	LP001	EGB4700140029	BACK LAMP	
	LP002	EGB4700140029	BACK LAMP	
	PH001	EGB4120STBLR2	PHOTO DIODE	
	XT001	EGB410090338M	CRYSTAL	

■ Tuner P.C. Board Ass'y

Block No. 0 4

TRANSISTORS

⚠	ITEM	PART NUMBER	DESCRIPTION	AREA
	Q101	2SC1675-L	SI.TRANSIST	
	Q102	2SC1675-L	SI.TRANSIST	
	Q103	2SA733A(P,K)	SI.TRANSIST NEC	
	Q105	DTA114YS	DIGITAL TRA ROHM	
	Q106	EGB4101501617	F.E.T. 8103	
	Q107	2SC945	SI.TRANSIST NEC	
	Q108	2SC945	SI.TRANSIST NEC	
	Q109	2SC945	SI.TRANSIST NEC	

I. C. S.

⚠	ITEM	PART NUMBER	DESCRIPTION	AREA
	IC101	EGB415201186N	I.C(MONO-AN 8103	
	IC102	LA1831-N	I.C(MONO-AN SANYO	

DIODES

⚠	ITEM	PART NUMBER	DESCRIPTION	AREA
	D101	1SS176-A7	SI.DIODE 6997	
	D102	1SS176-A7	SI.DIODE 6997	
	D105	1SS176-A7	SI.DIODE 6997	
	D106	EGB41201SV103	SI.DIODE 8103	
	D107	EGB41201SV103	SI.DIODE 8103	
	D108	EGB412020149B	SI.DIODE 8103	
	D109	EGB412020149B	SI.DIODE 8103	
	D110	EGB412152056J	ZENER DIODE 8103	

CAPACITORS

⚠	ITEM	PART NUMBER	DESCRIPTION	AREA
	C101	QCSB1HJ-470	47PF 50V CER.CAPACI	
	C102	QCGB1HK-102	1000PF 50V CER.CAPACI	
	C103	QCSB1HJ-330Y	33PF 50V CER.CAPACI	
	C104	QCHB1EZ-223	0.022MF 25V CER.CAPACI	
	C105	QCSB1HJ-150Y	15PF 50V CER.CAPACI	
	C106	QCHB1EZ-223	0.022MF 25V CER.CAPACI	
	C107	QCHB1EZ-223	0.022MF 25V CER.CAPACI	
	C108	QCHB1EZ-223	0.022MF 25V CER.CAPACI	
	C109	QCSB1HJ-220	22PF 50V CER.CAPACI	
	C110	QCSB1HJ-220	22PF 50V CER.CAPACI	
	C111	QCSB1HJ-560	56PF 50V CERAMIC	
	C112	QCBB1HK-101Y	100PF 50V CER.CAPACI	
	C113	QCXB1CM-472Y	4700PF 16V CER.CAPACI	
	C114	QFN81HK-104	0.1MF 50V METAL.MYLA	
	C115	QCBB1HK-471Y	470PF 50V CER.CAPACI	
	C116	EGB5091471513	470PF 100V METAL POLY	
	C117	QCSB1HJ-240	24PF 50V CERAMIC	
	C118	QETB1CM-107	100MF 16V AL E.CAPAC	
	C119	QCGB1HK-102	1000PF 50V CER.CAPACI	
	C120	QCHB1EZ-223	0.022MF 25V CER.CAPACI	
	C121	QCSB1HJ-150Y	15PF 50V CER.CAPACI	
	C122	QETB1HM-225	2.2MF 50V AL E.CAPAC	
	C123	QETB1HM-105	1MF 50V AL E.CAPAC	
	C124	QCSB1HJ-200	20PF 50V CERAMIC	
	C125	QETB1HM-105	1MF 50V AL E.CAPAC	
	C126	QFN81HK-473	0.047MF 50V METAL.MYLA	
	C127	QETB1EM-106	10MF 25V AL E.CAPAC	
	C128	QCHB1EZ-223	0.022MF 25V CER.CAPACI	
	C129	QETB1HM-105	1MF 50V AL E.CAPAC	
	C130	QCGB1HK-102	1000PF 50V CER.CAPACI	
	C131	QCGB1HK-102	1000PF 50V CER.CAPACI	
	C132	EGB5105123132	0.012MF 1000V SEMICONDUC	
	C133	EGB5105123132	0.012MF 1000V SEMICONDUC	
	C134	QCGB1HK-102	1000PF 50V CER.CAPACI	
	C135	QETB1HM-336	33MF 50V AL E.CAPAC	
	C136	QFN81HK-473	0.047MF 50V METAL.MYLA	
	C137	QETB1CM-226	22MF 16V E.CAPACITO	
	C138	QFN81HK-562	5600PF 50V METAL.MYLA	
	C139	QCHB1EZ-223	0.022MF 25V CER.CAPACI	
	C140	QETB1CM-107	100MF 16V AL E.CAPAC	
	C141	QCHB1EZ-223	0.022MF 25V CER.CAPACI	
	C142	QETB1CM-107	100MF 16V AL E.CAPAC	
	C143	QETB1HM-474	0.47MF 50V E.CAPACITO	
	C144	QCHB1EZ-223	0.022MF 25V CER.CAPACI	
	C145	QCSB1HJ-560	56PF 50V CERAMIC	
	C146	QCGB1HK-102	1000PF 50V CER.CAPACI	
	C147	QCHB1EZ-223	0.022MF 25V CER.CAPACI	
	C149	QCHB1EZ-223	0.022MF 25V CER.CAPACI	
	C151	QCXB1CM-152Y	1500PF 16V CER.CAPACI	
	C152	QCXB1CM-152Y	1500PF 16V CER.CAPACI	
	C153	QCHB1EZ-223	0.022MF 25V CER.CAPACI	
	C155	QCBB1HK-101Y	100PF 50V CER.CAPACI	
	C157	QETB1AM-477	470MF 10V E.CAPACITO	
	TC101	EGB5010100045	TRIMMER CA	
	TC102	EGB5010100045	TRIMMER CA	

RESISTORS

⚠	ITEM	PART NUMBER	DESCRIPTION	AREA
	R101	QRD161J-104	100K 1/6W CARBON RES	
	R102	QRD161J-102	1K 1/6W CARBON RES	
	R103	QRD161J-100	10 1/6W CARBON RES	
	R104	QRD161J-101	100 1/6W CARBON RES	
	R105	QRD161J-102	1K 1/6W CARBON RES	
	R106	QRD167J-152	1.5K 1/6W CARBON RES	
	R107	QRD167J-682	6.8K 1/6W CARBON RES	
	R108	QRD161J-331	330 1/6W CARBON RES	
	R109	QRD161J-104	100K 1/6W CARBON RES	
	R110	QRD161J-333	33K 1/6W CARBON RES	
	R111	QRD161J-102	1K 1/6W CARBON RES	
	R112	QRD161J-101	100 1/6W CARBON RES	
	R113	QRD161J-104	100K 1/6W CARBON RES	
	R114	QRD161J-104	100K 1/6W CARBON RES	
	R115	QRD161J-220	22 1/6W CARBON RES	
	R116	QRD161J-103	10K 1/6W CARBON RES	
	R118	QRD161J-101	100 1/6W CARBON RES	
	R119	QRD161J-471	470 1/6W CARBON RES	
	R120	QRD161J-332YTT	3.3K 1/6W CARBON RES	
	R121	QRD161J-103	10K 1/6W CARBON RES	
	R122	QRD161J-332YTT	3.3K 1/6W CARBON RES	
	R123	QRD161J-472	4.7K 1/6W CARBON RES	
	R124	QRD161J-102	1K 1/6W CARBON RES	
	R125	QRD161J-472	4.7K 1/6W CARBON RES	
	R126	QRD161J-472	4.7K 1/6W CARBON RES	
	R127	QRD161J-472	4.7K 1/6W CARBON RES	
	R128	QRD161J-103	10K 1/6W CARBON RES	
	R129	QRD161J-103	10K 1/6W CARBON RES	
	R130	EGB4270215155	METAL FILM	
	R131	QRD161J-102	1K 1/6W CARBON RES	
	R132	QRD161J-103	10K 1/6W CARBON RES	
	R133	QRD161J-332YTT	3.3K 1/6W CARBON RES	
	R134	QRD161J-332YTT	3.3K 1/6W CARBON RES	
	R138	QRD161J-472	4.7K 1/6W CARBON RES	
	R139	QRD161J-101	100 1/6W CARBON RES	
	R140	QRD161J-332YTT	3.3K 1/6W CARBON RES	
	R141	QRD161J-823	82K 1/6W CARBON RES	

OTHERS

⚠	ITEM	PART NUMBER	DESCRIPTION	AREA
		EGB2010079510	EARTH TERMI	
		EGB4144242910	PRINTED BOA	US
	L101	EGB4300400710	ANTENNA COI	
	L102	EGB43104A0850	RF COIL	
	L103	EGB4330400820	OSCILLATOR	
	L104	EGB4300103280	ANTENNA COI	
	L105	EGB4330102020	OSCILLATOR	
	L107	EGB4329247311	INDUCTOR	
	L108	EGB4329247311	INDUCTOR	
	T101	EGB4340200920	I.F.TRANSFO	
	T102	EGB4340101240	I.F.TRANSFO	
	CF101	EGB4160220044	CERAMIC FIL	
	CF102	EGB4160200003	CERAMIC FIL	
	CF103	EGB4160500089	CERAMIC FIL	
	CF104	EGB4160200273	CRYSTAL	
	CF105	CSB456F15	CERAMIC RES	
	CN101	EGB4491200295	CONNECT TER	
	CN102	EGB4490201002	CONNECT TER	
	JK101	EGB4560004086	ANTENNA TER	
		EGB4144243010	PRINTED BOA	Except US

Accessories List

Block No. M 5 M M

⚠	Item	Part Number	Part Name	Q'ty	Description	Area
	1	EGB9080021680	INSTRUCTION BOOK	1		EF,G,GI
		EGB9080021690	INSTRUCTION BOOK	1		BS
		EGB9080021710	INSTRUCTION BOOK	1		VX
		EGB9080021760	INSTRUCTION BOOK	1		EN
		EGB9080021830	INSTRUCTION BOOK	1		US
	2	BT-20066A	DISTRIBUTOR LIST	1		BS
	3	BT-20134	WARRANTY CARD	1		G
	4	BT20060	WARRANTY CARD	1		BS
	5	EGB71595100C4	WIRE-LESS REMOTE CONTROL	1		
	6	EQB4001-015	LOOP ANTENNA	1		
	7	E43486-340A	SAFETY SHEET	1		BS
	8	E67007-001	ANTENNA WIRE	2		
	9	QPGA025-03505	ENVELOPE	1		
	10	R03BPA-2STSA	BATTERY	1		
	11	ENZ2202-001	SIEMENS PLUG	1		

⚠:Safety Parts

The Marks for Designated Areas

BS .... the U.K. G ..... Germany GI .... Itary
EN .. Scadinavia EF .... Continental Europe US .... Singapore
VX .... East Europe No mark indicates all area.

Packing Materials and Part Numbers

Block No. M 6 M M

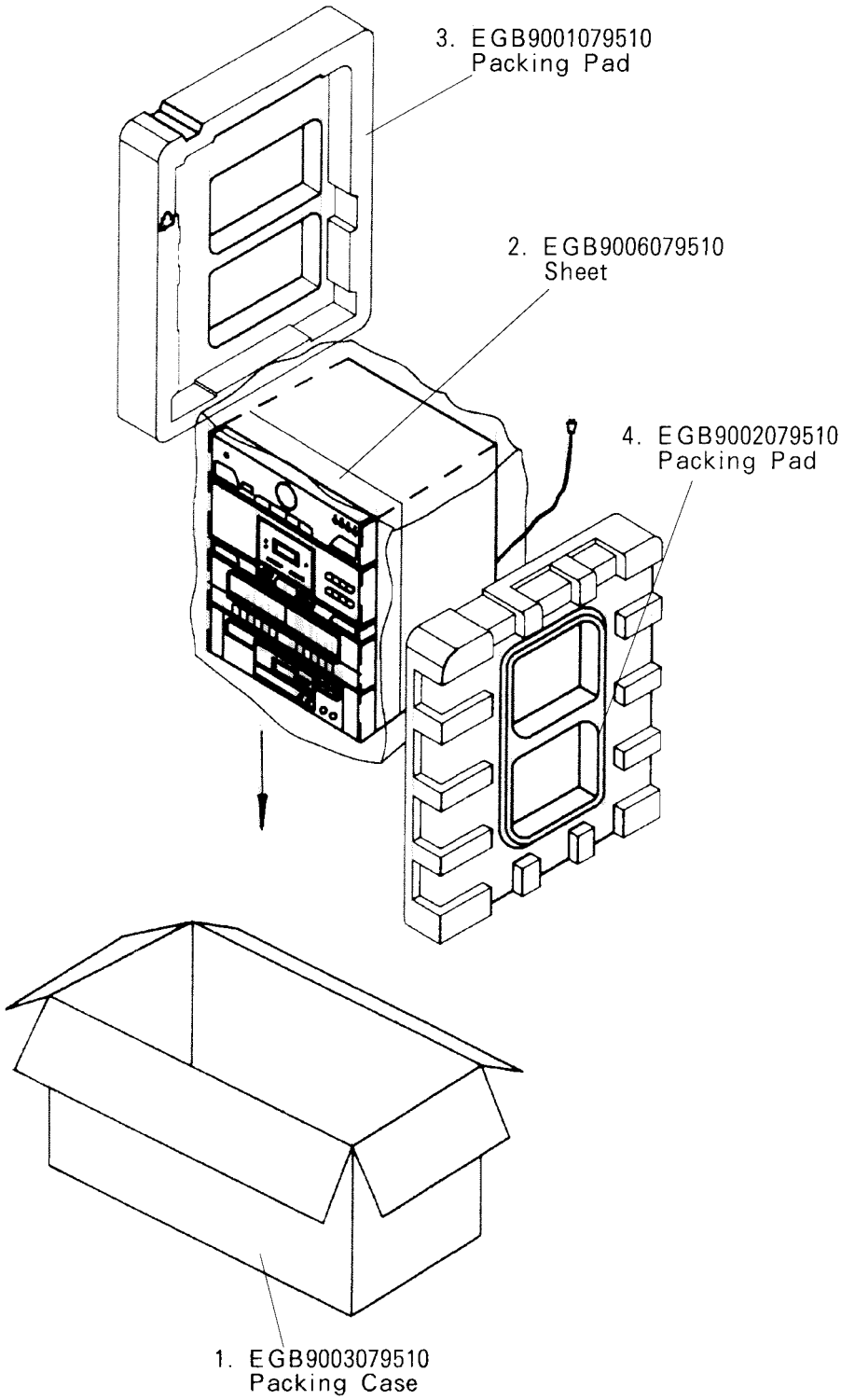

JVC
VICTOR COMPANY OF JAPAN, LIMITED
AUDIO DIVISION, 1644, SHIMOTSURUMA, YAMATO-SHI, KANAGAWA-KEN, 242, JAPAN

(No.20520)

Printed in Japan
9509 (V)